CONSTITUTION AND RULES

BOOK 1

Fédération Internationale de Tir à l'Arc

2004

CONSTITUTION AND RULES

BOOK 1 CONSTITUTION-ADMINISTRATION

BOOK 2 OUTDOOR TARGET ARCHERY

BOOK 3 INDOOR TARGET ARCHERY

BOOK 4 FIELD ARCHERY

BOOK 5 SKI-ARCHERY
MISCELLANEOUS ROUNDS

This edition contains all laws and by-laws approved by Congress through July 13th, 2003. There may be additional by-laws and interpretations after this date as well as amendments to the by-laws which may affect this edition. Please check the FITA website (www.archery.org) for a listing of all new by-laws, by-law amendments and interpretations which may be in force.

Adopted at the FITA Congress 1959, incorporating amendments approved at FITA Congresses 1961, 1963, 1965, 1967, 1969, 1971, 1972, 1973, 1975, 1976, 1977, 1979, 1980, 1981, 1983, 1985, 1987, 1989, 1991, 1993, 1995, 1997, 1999, 2001 and 2003.
Effective April 1st, 2004

Article **Page No**

BOOK 1: CONSTITUTION AND ADMINISTRATIVE RULES

CHAPTER 1 - FITA CONSTITUTION

1.1 Name 1
1.2 Objectives 1
1.3 Membership 1
1.4 Affiliation 3
1.5 Organization 4
1.6 Congress 5
1.7 President 8
1.8 The Vice Presidents 8
1.9 The Secretary General 8
1.10 The Executive Director 9
1.11 The Treasurer 9
1.12 Council 10
1.13 The Executive Committee 12
1.14 The Board of Justice 12
1.15 Sanctions 13
1.16 The Permanent Committees 13
1.17 Terms of Reference for the Permanent Committees 15
1.18 Procedure for Permanent Committees 17
1.19 Ad Hoc Committees 17
1.20 Continental Advisory Board 17
1.21 Honorary Officers 18
1.22 Awards 18
1.23 Subscription and Levies 18
1.24 Revenue from FITA Events 19
1.25 Auditing 20
1.26 Emblem, Flag and Fanfare 20
1.27 Office and Archives 20
1.28 Official Languages 20
1.29 Official Publications 21
1.30 Court of Arbitration for Sport 21
1.31 Responsibility 21
1.32 Resignation from Membership 21
1.33 Signature of FITA 22
1.34 Dissolution of FITA 22

Article **Page No**

CHAPTER 2 - ELIGIBILITY CODE

2.1 Admission 23
2.2 Eligibility Code 23
2.3 Medical Provisions 24
2.4 National Teams 24

CHAPTER 3 - CHAMPIONSHIPS

3.1 World Championships 27
3.2 Continental Championships 27
3.3 Dates 28
3.4 Allocation of Championships 28
3.5 Management Structure 29
3.6 Invitations 31
3.7 Entries 31
3.8 Accreditation 32
3.9 Championship Documents 33
3.10 Director of Shooting 33
3.11 Tournament Judge Commission 34
3.12 Technical Delegate 34
3.13 Jury of Appeal 35
3.14 Scoring 35
3.15 Team Officials 36
3.16 Draw for Shooting Positions 36
3.17 Repositioning on Targets 38
3.18 Control of Equipment 38
3.19 Practice 38
3.20 Championship Tournaments 40
3.21 Program and Protocol 41
3.22 Dress Regulations 41

CHAPTER 4 - COMPETITIONS

4.1 Disciplines 43
4.2 Classes 43
4.3 Divisions 44
4.4 Categories 45
4.5 Rounds 46
4.5.1 Outdoor Target Archery Rounds 46

Article **Page No**

4.5.2 Indoor Target Archery Rounds 48
4.5.3 The Field Archery Rounds 49
4.5.4 Ski-Archery 53
4.5.5 The Clout Round 53
4.5.6 Flight Shoots 53
4.5.7 The 3D Rounds 53
4.5.8 Run Archery 53
4.6 Events and Tournaments 53
4.7 FITA Events 54
4.8 Official Recognition of Tournaments 55
4.9 World Record Tournaments 56

CHAPTER 5 - TITLES AND RECORDS

5.1 World Championship Titles 57
5.2 World Records - Definition 58
5.3 World Records 59
5.4 World Record Tournaments 60
5.5 Confirmation of World Records 60
5.6 Olympic Records 61
5.7 Confirmation of Olympic Records 61
5.8 Publication of Records 62

CHAPTER 6 - MEDALS, TROPHIES, AWARDS

6.1 Medals 63
6.2 Prizes and Trophies 63
6.3 FITA Performance Awards 64
6.4 Events for FITA Performance Awards 66
6.5 Application for Awards 67

APPENDIX 1 - STANDING ORDERS - CONGRESS PROCEDURES

1 Constitutional Rules 69
2 Congress Venue 69
3 Attendance 70
4 Congress Documents 71
5 The Agenda 71
6 Rules of Procedure at Congress in Session 73
6.1 The President 73

Article **Page No**

6.2 The Delegates 73
6.3 The Minutes 74
6.4 The Motions for Laws 74
6.5 Proposals for Laws 76
6.6 Procedure for motions and proposals for by-laws 76
6.7 Voting 77

APPENDIX 2 – FITA CODE OF ETHICS

Preamble 79
1 Dignity 79
2 Integrity 79
3 Resources 80
4 Candidatures 81
5 Relations with States 81
6 Confidentiality 81
7 Implementation 82
8 Composition of Ethical Commission 82

APPENDIX 3 - PROCEDURE FOR THE BOARD OF JUSTICE

1 General Principles 83
2 Initiation of Action 83
3 Examination of the Action 84
4 Judgment 84

APPENDIX 4 - PROCEDURE FOR THE FITA JUDGE COMMITTEE

1 FITA Judges 87
2 First Accreditation 88
2.1 Applications 88
2.2 Examinations 88
2.3 Delayed Accreditation 89
3 Re-Accreditation 89
4 Special Requirements 90
5 Honorary Titles 91
5.1 Judge Emeritus 91
5.2 Honorary Judge 91
5.3 Judge Committee Awarded Judge 91
6 Continental Judges 91

Article **Page No**

7 National Judges 92

APPENDIX 5 – ANTI-DOPING RULES

Anti-Doping Rules Table of Contents 93
Introduction 97
1 Definition of Doping 99
2 Anti-Doping Violations 99
3 Proof of Doping 100
4 The Prohibited List 101
5 Testing 110
6 Analysis of the Samples 114
7 Results Management 114
8 Right to a Fair Hearing 116
9 Automatic Disqualification of Individual Results 118
10 Sanctions on Individuals 118
11 Consequences to Teams 122
12 Sanctions and Costs assessed against Member Associations 122
13 Appeals 123
14 Member Associations and FITA Anti-Doping Rules 125
15 Recognition of Decisions by other Organizations 126
16 Statute of Limitation 126
17 FITA's Compliance reports to WADA 127
18 Amendment and Interpretation of Anti-Doping Rules 127
19 Definitions 128
20 FITA Anti-Doping Agreement 133
21 Doping Control Station 134
22 Doping Control Information 135
23.1 TUE (Standard) 136
23.2 TUE (Abbreviated) 140
23.3 TUE (Certificate of Approval) 142
24.1 Doping Control Notification 143
24.2 Doping Control Official Record 144
25 Doping Control Transport Form 145
26 Doping Control Alcohol Test 146

APPENDIX 6 - GUIDELINES FOR FITA PLAQUETTES

Bronze 147
Silver 147
Gold 147

Article **Page No**

APPENDIX 7 - OLYMPIC CHARTER RULES

Olympic Charter Rule 45 149
Bye-Law to Rule 45 149
Olympic Charter Rule 61 Advertising 150
Bye-Law to Rule 61 150
Archery Exemption 152

APPENDIX 8 - SAMPLE ENTRY FORMS

1 1. Junior Outdoor Target Archery Championships (Preliminary) 153
2 2. Outdoor Target Archery Championships (Preliminary) 154
3 3. Junior Outdoor Target Archery Championships (Final) 155
4 4. Outdoor Target Archery Championships (Final) 157
5 5. Indoor Target Archery Championships (Preliminary) 159
6 6. Indoor Target Archery Championships (Final) 160
7 7. Field Archery Championships (Preliminary) 162
8 8. Field Archery Championships (Final) 163
9 Hotel Booking Form 165
10 Transport Form 166

APPENDIX 9 - ATHLETES WITH DISABILITIES

Explanatory text 167

APPENDIX 10 - FITA FANFARE 169

APPENDIX 11 - FITA MATCHPLAY CHARTS

1 Match play Chart 64 athletes 171
2 Match play Chart 32 athletes 172
3 Match play Chart 16 athletes or 16 teams 173

APPENDIX 12 - FITA WORLD RANKING EVENTS

Application and Agreement 175

APPENDIX 13 - FITA ANTI-DOPING AGREEMENT

Agreement 179

Article **Page No**

BOOK 2 - OUTDOOR TARGET ARCHERY

CHAPTER 7 - OUTDOOR TARGET ARCHERY ROUNDS

7.1 Range Layout 1
7.2 Venue Equipment 3
7.3 Athletes' Equipment 8
7.4 Shooting 13
7.5 Order of Shooting and Timing Control 15
7.6 Scoring 20
7.7 Shooting Control and Safety 24
7.8 Consequences of breaking rules 26
7.9 Judging 29
7.10 Questions and Disputes 30
7.11 Appeals 30

APPENDIX 1 BOOK 2

VENUE EQUIPMENT

1 SEEDING DIAGRAMS

1. Matchplay Chart (64 athletes) 31
2. Matchplay Chart (32 athletes) 32
3. Matchplay Chart (16 athletes or 16 teams) 33

2 ARCHERY RANGE LAYOUTS

1. Range Layout - Major Events 35
2. Range Layout - Other Events 36
3. Field Layout - Olympic Round 37
4. Shooting Line Layout - OR Teams Finals 38

3 TARGET FACES

1. Outdoor Butt set-up 39
2. Outdoor Target Face 40
3. Outdoor 80cm-center multiple face set-up 41

Article **Page No**

APPENDIX 2 BOOK 2

ATHLETES' EQUIPMENT

1. Arrow 43
2. Compound Bow 43
3. Recurve Bow 44

APPENDIX 3 BOOK 2

SCORECARDS

1. Scorecards 45

Article **Page No**

BOOK 3 - INDOOR TARGET ARCHERY

CHAPTER 8 - INDOOR TARGET ARCHERY ROUNDS

8.1 Range Layout 1
8.2 Venue Equipment 2
8.3 Athletes' Equipment 8
8.4 Shooting 12
8.5 Order of Shooting and Timing Control 14
8.6 Scoring 18
8.7 Shooting Control and Safety 23
8.8 Consequences of breaking rules 24
8.9 Judging 27
8.10 Questions and Disputes 28
8.11 Appeals 28

APPENDIX 1 BOOK 3

VENUE EQUIPMENT

1 SEEDING DIAGRAMS

1. Matchplay Chart (32 athletes) 29
2. Matchplay Chart (16 athletes or 16 teams) 30

2 RANGE LAYOUT

1. Shooting Line Layout Teams Finals 31

3 TARGET FACES

1. Indoor Butt set-up 32
2. Indoor Target Face 33
3. Indoor Vertical Triple Faces 34
4. Indoor Vertical Faces Team Event 35
5. Indoor 4x40cm Single and Triangular Triple Faces 36

Article **Page No**

APPENDIX 2 BOOK 3

ATHLETES' EQUIPMENT

1. Arrow 37
2. Compound Bow 37
3. Recurve Bow 38

APPENDIX 3 BOOK 3

SCORECARDS

1. Scorecards 39

Article **Page No**

BOOK 4 - FIELD ARCHERY

CHAPTER 9 - FIELD ARCHERY ROUNDS

9.1 Range Layout 1
9.2 Venue Equipment 3
9.3 Athletes' Equipment 4
9.4 Shooting 10
9.5 Order of Shooting and Timing Control 11
9.6 Scoring 13
9.7 Shooting Control and Safety 16
9.8 Consequences of breaking rules 17
9.9 Judging 19
9.10 Questions and Disputes 20
9.11 Appeals 21

APPENDIX 1 BOOK 4

1. COMPETITION – SEEDING DIAGRAM

1. Matchplay Chart 23

2 VENUE EQUIPMENT

1. Field Faces 24

APPENDIX 2 BOOK 4

ATHLETES' EQUIPMENT

1. Arrow 27
2. Compound Bow 27
3. Recurve Bow 28

Article **Page No**

BOOK 5 - MISCELLANEOUS ARCHERY ROUNDS

CHAPTER 10 – SKI-ARCHERY

1 Ski-Archery 1
2 Classes of Athletes 1
3 Events 1
4 Registration and Entry 2
5 Draw and assignment of Start Numbers 3
6 Team Captains Meeting 6
7 General Organization and Appointment 6
8 Competition Jury 7
9 International Referees 8
10 Competition Facilities and Arrangements 9
11 Start Areas 10
12 Course and Associated Parts 11
13 Shooting Range 14
14 Finish Area 16
15 Team Waxing and Warming Cabins 17
16 Competition Equipment and Clothing 17
17 Practice and Zeroing 19
18 Warming-up on the Course 20
19 Start Regulations 21
20 Skiing Regulations 24
21 Shooting Regulations 26
22 The Finish, Competition Time and Results 29
23 Timing Systems 31
24 The Competition Results 31
25 Protests 32
26 Penalties 32
27 Disciplinary Measures 35
28 Prohibitions and Sanctions for non-competing persons 35

ANNEXE A - Material Catalogue

1 General 36
2 Material Specifications 36
2.1 Competition Equipment 36
2.2 Organization Equipment 40
3. Abbreviations 41

Article **Page No**

CHAPTER 11 - MISCELLANEOUS ROUNDS

Table of Contents 1

11.1 Club Rounds 3
11.1.1 50 meter Match Round 3

11.2 The Duel Match Round 6
11.2.1 The Round 6
11.2.2 Range Layout 7
11.2.3 Target Faces 7
11.2.4 Shooting 7
11.2.5 Order of Shooting - Timing Control 8
11.2.6 Scoring 8

11.3 The FITA 3D Animal Round 10
11.3.1 The Round 10
11.3.2 Targets 10
11.3.3 Athletes' Equipment 11
11.3.4 Shooting 12
11.3.5 Order of Shooting 12

11.4 The Forest Round 13
11.4.1 Classes 13
11.4.2 Divisions 13
11.4.3 The Forest Round 13
11.4.4 Range Layout 14
11.4.5 Venue Equipment 15
11.4.6 Athletes' Equipment 16
11.4.7 Shooting 16
11.4.9 Scoring 16

11.5 The Clout Round 18
11.5.1 Classes 18
11.5.2 Divisions 18
11.5.3 The Clout Round 18
11.5.4 Venue Equipment 18
11.5.5 Athletes' Equipment 19
11.5.6 Shooting 23
11.5.7 Scoring 24
Diagram: Scoring 25

TABLE OF CONTENTS

FITA CONSTITUTION AND RULES

Article **Page No**

11.6 Flight Shooting 26
11.6.1 Classes 26
11.6.2 Divisions 26
11.6.3 Flight Shoots 26
11.6.4 FITA Events 26
11.6.5 Range Layout 27
11.6.6 Field Procedures and Measurements 28
11.6.7 Athletes' Equipment 29
11.6.8 Shooting 33
11.6.9 Scoring 34
11.6.10 Flight Officials 34

11.7 The Academic Round 36
11.7.1 The Round 36
11.7.2 Classes 36
11.7.3 Divisions 36
11.7.4 Targets 36
11.7.5 Scoring 37
11.7.6 FISU University Championships 37

11.8 Run Archery 38

11.9 The FITA Field Club Round – Handicap System 38
Handicap system 38
Hit or Miss system 38
Hitzone 38
Handicap Table 40

11.10 3DI Rules 42
11.10.1 General Rules 42
11.10.2 Athlete's Equipment 45
11.10,3 Planning of World Championships 50

ASSOCIATE MEMBERS and Target face makers

MEMBER ASSOCIATIONS with Acronyms

ADDENDUM
Explanations of this Edition - List of Rule Changes

EDITION

BOOK 1

Constitution

and

Administrative Rules

This edition contains all laws and by-laws approved by Congress through July 13th, 2003. There may be additional by-laws and interpretations after this date as well as amendments to the by-laws which may affect this edition. Please check the FITA website (www.archery.org) for a listing of all new by-laws, by-law amendments and interpretations which may be in force.

CHAPTER 1

FITA CONSTITUTION

1.1 NAME

1.1.1 The name of the Federation shall be Fédération Internationale de Tir à l'Arc and shall be abbreviated FITA.

1.2 OBJECTIVES

1.2.1 The objectives of FITA, a non-profit organization according to articles 60 and following of the Swiss Civil Code, shall be:

- To promote and encourage Archery throughout the World in conformity with the Olympic principles;
- To define and promote FITA goals;
- To frame and interpret FITA Rules and Regulations;
- To arrange for the organization of World Championships as Congress may establish in any discipline of Archery;
- To confirm and maintain:
  - World Record Scores;
  - Olympic Games Record Scores;
- To maintain complete lists of scores from:
  - FITA Championships;
  - Olympic Games.

1.3 MEMBERSHIP

1.3.1 Members of FITA shall be:

- Member Associations;
- Continental Associations;
- Associate International Federations;
- Associate Members.

1.3.2 Member Associations of FITA shall be National Archery Associations, one only from each country or territory.

1.3.2.1 The name of a National Archery Association must indicate the territorial extent and tradition of that country.

1.3.2.2 Member Associations and Continental Associations shall recognize FITA as the International Federation for Archery representing the FITA objectives internationally. Members shall be bound by its Rules, shall submit to its jurisdiction in FITA matters and shall undertake to do everything to promote its goals. Members, their officers and athletes, will be bound by the FITA Constitution and Rules and by the FITA Code of Ethics.

1.3.2.3 No discrimination in the practice or the administration of Archery shall be allowed against any country, association or person on grounds of gender, race, religion or politics.

1.3.3 Associate International Federations shall recognize FITA as the International Federation for Archery representing FITA matters internationally. They shall be bound by their agreement of co-operation with FITA and shall submit to FITA jurisdiction in FITA matters and shall promote its goals.

1.3.4 FITA recognizes one Continental Association for each of the following five areas:

- Africa
- The Americas
- Asia
- Europe
- Oceania

1.3.4.1 The responsibilities of the Continental Associations shall be:

- To promote and encourage Archery throughout the area in conformity with the Olympic and FITA principles and goals;
- To arrange for the organization of Continental Championships and International events in any discipline of Archery;
- To confirm and maintain:
  - Continental Record Scores;
- To maintain complete lists of scores from:
  - Continental Championships.

FITA may delegate additional responsibilities to these Continental Associations, as it deems appropriate in the best interest of FITA.

1.3.5 Associate Members may be individuals, institutions or companies wishing to contribute substantially to FITA's activity in promoting International Archery. They may attend Congress and may speak, but have no vote.

1.3.6 Associate International Federations may be federations practicing other forms of Archery and wishing to contribute substantially to FITA's activity in promoting International Archery. They may attend Congress and may speak, but have no vote.

1.4 AFFILIATION

1.4.1 National Associations, Continental Associations and Associate International Federations wishing to become members of FITA must submit a written application clearly stating the acceptance of the FITA Constitution and the FITA Code of Ethics for their association and its members.

1.4.2 Applications for Member Association affiliation and Associate International Federation affiliation, must be accompanied by:

- A copy of the applicant's current Constitution;
- A statement clearly accepting the FITA Constitution;
- The membership fee for the current year.

1.4.3 The Executive Committee will evaluate the application for Member Association affiliation.

1.4.3.1 The Executive Committee satisfied that the application for Member Association affiliation is in order, will announce it to all Member Associations and to all Members of Council. If no serious objections are raised in writing within 60 days of this announcement, temporary membership will be granted until the next Congress, when final affiliation will be submitted to a vote. If there are any objections, the Executive Committee will examine them and decide whether or not to award temporary membership.

1.4.4 Congress may decline an application for Member Association affiliation in which case the fee paid shall be returned.

1.4.5 The Executive Committee will negotiate an agreement of co-operation with the International Federation wishing to become an Associate International Federation.

1.4.5.1 Applications from Associate International Federations will be subject to the same procedure from National Associations providing that a satisfactory agreement of cooperation has been reached between the Applicant and the Executive Committee of FITA.

1.4.6 The application for Associate Member affiliation must be in writing and accompanied by:

- A statement clearly accepting the FITA Constitution.
- The membership fee for the current year.

1.4.6.1 The Executive Committee satisfied that the application for Associate Member affiliation is in order, will grant final affiliation and announce it to all Members and to all Members of Council.

1.5 ORGANIZATION

1.5.1 FITA is governed through Laws and Bylaws. Changes to the laws may only be made by Congress. Changes to Bylaws, after reference to the appropriate Permanent Committee, are decided by Council.

1.5.2 Congress is the Senior Administrative body of FITA: to it belong all powers that are not specifically attributed to other offices of this Constitution.

1.5.3 Congress elects, and to it are responsible, the following offices of FITA,

Namely:

- The President;
- The First Vice President;
- The Vice Presidents;
- The Council;
- The Board of Justice;
- The Permanent Committees;

Responsible to the Congress are also:

- The Secretary General;
- The Treasurer;

who are appointed by the President and approved by Congress.

1.5.4 The President, the First Vice President and one Vice President form the Executive Committee. They are supported by the Secretary General and an Executive Director. They participate in all activities of the Executive Committee and Council with no voting rights.

1.5.5 Persons elected to FITA offices will serve a term of four (4) years unless otherwise specified.

1.5.6 No person shall be elected to more than one body of FITA (this does not apply to members of the Continental Association Advisory Board).

1.5.7 Retiring officers are eligible for re-election.

1.5.7.1 The President, two Vice Presidents and three members of the Council shall be elected at the Congress held the year after the Summer Olympic Games.

The First Vice President, another Vice President, four other members of the Council and the Board of Justice shall be elected at the Congress held three years after the Summer Olympic Games.

1.5.7.2 The Permanent Committees shall be elected as follows:

- *At the Congress held the year after the Summer Olympic Games:*
  - *The Technical Committee;*
  - *The Target Archery Committee;*
  - *The Medical Committee;*

- *The Development and Technical Assistance Committee;*

- *At the Congress held three years after the Summer Olympic Games:*
  - *The Constitution and Rules Committee;*
  - *The Field Archery Committee;*
  - *The Judges' Committee;*
  - *The Athletes' Committee;*
  - *The Coaches' Committee.*

1.5.8 The Presidents of the Continental Associations shall form the Continental Association Advisory Board, which will meet at least once per year with FITA Council.

1.6 CONGRESS (see also Appendix1 of Book1)

1.6.1 Congress is formed by the delegations of Member Associations and Continental Associations, by Council and by the Permanent Committees as well as Associate Members and Associate International Federations as specified in articles 1.3.5 - 1.3.6. Delegations are qualified to attend Congress only if the Association they represent are in good standing (see definition of good standing in Appendix1 of Book1, article 3.1.6).

1.6.2 Each Member Association shall be allowed one voting delegate and no more than two other delegates. Continental Associations may be represented by no more than two delegates. Associate Members may be represented by no more than one representative. Associate International Federations may be represented by no more than two delegates.

1.6.3 Each Member Association shall have one vote. The vote of a Member Association may be cast by proxy only by another Member Association. No Member Association may carry more than one proxy vote. Each Member Association shall table written authority signed by the President of the Member Association naming its voting delegate and an alternate voting delegate before the meeting starts. Each proxy shall be in writing signed by the President of the Member Association from which it is given to the Member Association which has accepted the proxy, and it shall be tabled with the Secretary General prior to the start of the meeting. No Member Association may give a proxy vote unless it is in good standing.

1.6.4 A Congress session shall be valid if at least 25% of the Member Associations qualified to attend have registered prior to the beginning of the session.

1.6.5 The President or the Chairperson of Congress in Session shall have a casting vote in the event of a tie. Other Members of Council, the Secretary General and the Treasurer shall not serve as voting delegates or carry proxies.

1.6.6 Congress will discuss and decide on all matters that have been placed on the Agenda according to article 1.6.15 and Appendix1 of Book1, article 5.

1.6.7 Congress decisions are final and can only be changed by the vote of a following Congress. Changes to Chapter 1 (the FITA Constitution) and Rules of Shooting as

laid down in Chapters 4, 7, 8 and 9 shall require a two-thirds majority of the votes cast "for" or "against"; whereas changes to other chapters shall be decided by a simple majority of the votes cast "for" or "against". FITA Officers shall be elected following the procedure outlined in Appendix1 of Book1, article 6.7.

1.6.8 The President shall preside at all meetings of Congress at which he is present. In the absence of the President, the First Vice President shall preside, or, if neither are present, a Member of Council other than the Secretary General or the Treasurer. If none of these are present, then a voting delegate shall be elected as Chairperson.

1.6.9 The Executive Committee shall convene the Ordinary Session of Congress at the time of every Outdoor Target World Championship either immediately before or after the Outdoor Target Archery World Championships and in the same geographic location. However Congress will be held every two years in case the Outdoor Target Archery Championship does not take place.

1.6.10 The Executive Committee shall convene an Extraordinary Session of Congress on the written request of Council or a simple majority of the Member Associations.

1.6.11 The notice convening an Extraordinary Session of Congress shall state clearly the object for which the meeting is being called. The only business which shall take place at an Extraordinary Session of Congress shall be the special business for which such a meeting is called.

1.6.12 Motions and Proposals for changing the Laws may be submitted to the Secretary General only by Member Associations, Continental Associations, the President or Council. (For Procedure see Appendix1 of Book1, article 6.4)

1.6.12.1 This submission shall be at least two hundred and forty (240) days prior to Congress.

1.6.13 Motions and Proposals for changing the Bylaws may be submitted to the Secretary General only by Member Associations, Continental Associations, the President or Council. (For Procedure see Appendix 1 of Book 1, article 6.6)

1.6.14 The Secretary General will distribute all motions and proposals for changing the Laws to the relevant Permanent Committees for review, collation and recommendations.

1.6.14.1 This distribution shall be within 5 working days.

1.6.14.2 The Committees' recommendations on submitted motions and proposals will be sent to the Secretary General, along with any motions or proposals from the Permanent Committees within their respective terms of reference two hundred and fifteen (215) days prior to Congress.

1.6.14.3 The Secretary General will distribute these motions and proposals to all Member Associations, Continental Associations and Members of Council two hundred (200) days prior to Congress.

1.6.15 Any amendments to motions and proposals for changing the Laws shall be sent to the Secretary General:

1.6.15.1 No later than one hundred and forty days (140) prior to Congress; after which time no amendments to motions and proposals will be permitted.

1.6.15.2 Eighty (80) days prior to Congress, the Secretary General will collate and distribute to all Members of FITA, Members of Council, Honorary Officers, Board of Justice and Permanent Committees:

- *The Congress Agenda;*
- *The Treasurer's Report, the audited income and expenditure account and balance sheet, the financial programs and the Auditor's Report;*
- *The Annual Report, including FITA goals;*
- *The Motions and Proposals, including comments by the relevant Committees;*
- *The Permanent Committees' Reports;*
- *The list of nominations for offices received by that date.*

1.6.16 The Chairperson of Congress has the right to submit compromise motions.

1.6.17 The Secretary General will announce to all Member Associations the positions to be elected at Congress.

1.6.17.1 One hundred eighty (180) days prior to Congress the nomination forms will be distributed.

1.6.18 Nominations for positions will be submitted only by Member Associations.

1.6.18.1 The person nominated must include a written statement by the candidate that he/she belongs to a Member Association and is willing to accept such office, if elected. If no nomination for an office is received, then nominations for that office will be accepted from the floor of Congress.

Those nominations sent to the Secretary General and postmarked at least ninety (90) days prior to the date of the Congress will be distributed in accordance with article 1.6.15. Nominations with a postmark of fewer than ninety (90) days prior to the date of Congress must be received by the Secretary General at least 2 days before the start of Congress.

1.6.19 Congress Sessions will be recorded and the minutes are distributed.

1.6.19.1 The Secretary General will, within six months of the end of Congress, distribute the Congress Minutes to all Members of FITA, Honorary Officers, Members of Council and Members of Permanent Committees.

1.6.19.2 Every participant in Congress may request to have his words minuted in full. In this case he must provide a written and signed text before the end of the session at which he has spoken.

1.6.19.3 Translation services in at least the official languages of FITA will be available at all sessions of Congress.

1.6.20 Any Member Association, Continental Association, the President, Members of Council, or FITA Permanent Committees may introduce motions in a conceptual form. If the concept is approved by Congress, then the appropriate Committee(s) will write the rules and make the necessary changes to implement the concept.

Council will review and approve the rules proposed by the Committee(s) - (see Appendix1 of Book1, article 6.4.1).

1.7 THE PRESIDENT

1.7.1 The President represents FITA, presides over Congress, Council and Executive Committee meetings and is an "ex officio" member of all Committees.

1.7.2 At every Congress, the President will present a report on the administration and activities of the Federation and a program of activities for the period up to the next Congress.

1.7.3 The President, in the event of an emergency situation at any FITA Championship, has the authority to temporarily make any rule changes that he deems necessary to protect the best interests of FITA.

1.7.4 The President may delegate a Vice President or, if that is impractical, another officer of FITA to represent the Federation at significant events or meetings.

1.7.5 The President will designate the Chairpersons of the Permanent Committees from those members elected by Congress.

1.8 THE VICE PRESIDENTS

1.8.1 There will be one First Vice President and three Vice Presidents.

1.8.2 The First Vice President will represent the President if he is unable to attend a function and has appointed no other delegate.

1.8.3 Each Vice President will have liaison with and oversight of various aspects of FITA.

1.9 THE SECRETARY GENERAL

1.9.1 The Secretary General is the officer responsible for the correct and efficient functioning of FITA's administration.

1.9.2 The role of the Secretary General is as follows;

1.9.2.1 To assist the President in representing FITA in the Olympic Family;

1.9.2.2 To approve the official FITA publications;

1.9.2.3 To act as mentor for the Executive Director.

1.9.3 He may participate in all activities of the Executive Committee and Council without voting rights. <u>The Secretary General shall have voting rights in all aspects relating to Article 1.10.2.</u>

1.9.4 <u>The Secretary General is an ex officio member of the C&R Committee.</u>

1.10 THE EXECUTIVE DIRECTOR

1.10.1 The Executive Director is in charge of the Executive office of FITA and its staff.

1.10.2 The Executive Director is appointed by the Executive Committee, approved by Council and paid for by FITA funds.

1.10.3 By virtue of his office the Executive Director has the authority to manage the day-to-day affairs of FITA and carry out the instructions of the Executive Committee, Council and Congress.

1.10.3.1 The primary tasks are:

- *The supervision of the Executive Office;*
- *The timely distribution of relevant information to Member Associations and Members of the Council;*
- *The editing of the Official Bulletins;*
- *The preparation of Congress meetings;*
- *The keeping and distribution of Congress Minutes;*
- *The preparation of Council meetings;*
- *The keeping and distribution of Council Minutes;*
- *The preparation of Executive Committee meetings;*
- *The keeping and distribution of Executive Committee Minutes;*
- *The processing of temporary affiliations;*
- *The keeping of Records as specified in article 1.2.1;*
- *The keeping of scores as specified in article 1.2.1;*
- *The distribution of FITA Awards.*

1.10.4 He may participate in all activities of the Executive Committee and Council without voting rights.

1.11 THE TREASURER

1.11.1 The Treasurer, subject to the authority of the President, will keep an orderly account of FITA finances.

1.11.1.1 The primary tasks are:

- *The keeping of income and expenditure accounts;*
- *The keeping of balance sheets;*
- *The keeping of accounts relative to each Member Association;*
- *The keeping of accounts relative to each section of the budget;*
- *The preparation of financial information necessary for Congress, Council and Executive Committee meetings.*

1.11.2 The Treasurer will prepare annually a detailed budget for Council approval.

1.11.3 The Treasurer will present a report and audited accounts to Council annually and to Congress every two years.

1.12 COUNCIL

1.12.1 Council is made up of:

- The President;
- The First Vice President;
- Three Vice Presidents;
- Seven other members.

And the following ex-officio members with full participation rights but no vote:

- The Secretary General;
- The Treasurer;
- The Chairperson of the C&R Committee.

Except for the ex-officio members, there will be no more than two members from one Member Association.

1.12.2 Council is the governing body of FITA between the meetings of Congress; therefore it represents Congress during that time. Council shall meet at least once a year.

1.12.2.1 Council may meet physically or through the use of any other simultaneous, recorded communication tool.

1.12.2.2 Council may use postal questionnaires or call extraordinary sessions of Congress where necessary.

1.12.3 An extraordinary meeting of Council will be convened on request of the Executive Committee, or a majority of the total number of Council members.

1.12.3.1 The Executive Director will send the notice of the meeting to all Council Members at least ten (10) days before the meeting and include the agenda of the meeting.

1.12.4 The quorum for a Council meeting or vote shall be the majority of its members with voting powers.

1.12.5 Council decisions will be made by a simple majority of votes expressed.

1.12.5.1 Council may make its decisions by postal, electronic, telegraphic or faxed vote. Votes reaching the Secretary General after the date specified will not be considered.

1.12.6 Council will:

- Oversee the implementation of FITA goals;
- Approve yearly a program of activity along the lines established by Congress;
- Approve an annual budget allocating funds for the implementation of FITA activities (Council, Permanent Committees, ad hoc committees, projects);
- Allocate funds to Continental Associations;

- Consider for approval the annual report of the Treasurer;
- Appoint a Vice President to become a member of the Executive Committee on an annual basis;
- Refer tasks to Permanent and ad hoc Committees within those Committees' respective terms of reference;
- Consider for approval any appointment to the position of Executive Director;
- Approve any additional positions to the FITA office;
- Appoint ad hoc committees as necessary;
- Appoint FITA Technical Delegates for Olympic Games and FITA Championships;
- Appoint Judges as required on the recommendation of the Judges' Committee;
- Review and approve the rule changes following Congress decisions as submitted by the relevant committees for publication in the FITA Constitutions and Rules (see article 1.6.20);
- Decide on sanctions proposed by the Board of Justice (C&R Book1, article 1.15.6;
- Decide on appeals against denial of re- accreditation (C&R Book1, App.4, article 3.3;
- Decide on doping matters according to C&R Book1, App.5, Art. 10.5.3; 12.1; 12.2: 12.3;
- Approve bylaw changes;
- Control that Member Associations comply with the FITA Anti-Doping Rules (see Book1; App.5; Art. 12) and with the World Anti Doping Code.
- Approve rules for Ski-Archery as recommended by the ad hoc Ski-Archery Committee.
- Approve rules for Run-Archery as recommended by the ad hoc Run-Archery Committee.
- Approve rules for 3D Archery as recommended by the ad hoc FITA-3DI Committee.

1.12.7 Should any vacancies occur in Council, or should members of Council fail to respond to Council matters for a period of six (6) consecutive months and/or fail to attend two (2) consecutive Council meetings, the Executive Committee may declare those members inactive. The Executive Committee will refer to the records of the last Congress at which Council Members were elected to fill the vacancy with the individual who received the highest number of votes but was not elected to Council at that time, provided that the person recorded at least 35% of the votes cast in the first ballot. If that person does not meet that criterion, the Executive Committee will consult with the remaining members of Council before appointing the replacement member. The replacement will serve only until the next Congress.

1.12.8 The minutes of Council meetings (including the budget) will be published and circulated to all FITA members and FITA officials.

1.13 THE EXECUTIVE COMMITTEE

1.13.1 The following executive officers of Council will form the Executive Committee:

- The President;
- The first Vice President;
- A Vice President.

  The Vice President will be appointed by Council on an annual basis.

Any two of these will form a quorum.

The Secretary General and the Executive Director will support the Executive Committee and participate without voting rights (see article 1.33 Signature).

1.13.2 Each Committee decision will be made by a simple majority.

1.13.3 The Executive Committee will handle all routine business and make decisions of a routine nature.

1.13.4 The Executive Committee will cause proper books of accounts to be kept.

1.13.5 The Executive Committee will appoint a FITA Anti-Doping Administrator.

1.13.6 The Executive Committee will nominate the FITA Anti-Doping Panel (see Book1; App.5; Art. 8.1.1).

1.13.7 The Executive Committee will appoint a TUE panel (Therapeutic Use Exemption) (see Book1; App.5; Art. 4.4.3).

1.13.8 The Executive Committee may provisionally suspend an athlete in case of doping (see Book1; App.5; Art. 7.4).

1.14 THE BOARD OF JUSTICE (see Appendix 3 of Book1)

1.14.1 Congress will elect a Board of Justice of five members to investigate alleged breaches of the FITA Constitution and Rules (except anti-doping violations), and/or the FITA Ethic Code (see Appendix2 of Book1, FITA Ethic Code) by Member Associations, their members or by other Members of FITA.

1.14.2 Each member of the Board of Justice must belong to a different Member Association.

1.14.3 The Board will elect its own Chairperson.

1.14.4 Cases can be submitted to the Board of Justice by:

- The President;
- The Council;
- The Executive Committee;
- Member Associations;
- Judges, or Juries of Appeal, for cases arising in tournaments under their supervision.

1.14.5 The examination of a case will include a fair hearing of all parties involved.

1.14.6 A member of the Board of Justice cannot be President of a Member Association.

1.14.7 Every case will be sent to the Secretary General for referral to the Board of Justice.

1.15 SANCTIONS (except violations of the FITA Anti-Doping Rules)

1.15.1 The Board of Justice will submit a detailed report on each examined case that will also propose:

- Dismissal of the case as irrelevant;
- Acquittal;
- Sanctions to be imposed.

1.15.2 Sanctions can be:

- Public reprimand;
- Withdrawal of record recognition;
- Withdrawal of awards and prizes;
- Temporary suspension up to one year;
- Expulsion from FITA.

1.15.3 An expelled Member Association or one or more of its members may re-apply for membership after one year has elapsed. This application will be considered by the next Congress.

1.15.4 Applications submitted according to article 1.15.3 will be dealt with by Council, which will circulate it with a recommendation to all Member Associations and submit the application for ratification by Congress.

1.15.5 The costs to FITA of the investigation of a case may be claimed from the party found guilty.

1.15.6 Board of Justice recommendations for sanctions will be ratified by Council. In cases brought against elected officers for alleged misuse of office, or if the expulsion of a Member Association is recommended, the recommendation will be circulated to all Member Associations and submitted for ratification by Congress.

1.15.7 Council, or Congress decisions, as the case may be, are final but subject to article 1.30.

1.15.8 All sanctions will be communicated to the parties concerned**,** to all Member Associations and to all FITA Judges within ten (10) days from the date of ratification.

1.16 THE PERMANENT COMMITTEES

1.16.1 There will be the following Permanent Committees:

- The Constitution and Rules Committee;
- The Technical Committee;

- The Target Archery Committee;
- The Field Archery Committee;
- The Judges' Committee;
- The Medical Committee;
- The Development and Technical Assistance Committee;
- The Athletes' Committee;
- The Coaches' Committee.

1.16.2 The Permanent Committees will be elected by Congress and their Chairmen will be designated by the President. Between the meetings of Congress the Permanent Committees are responsible and accountable to Council.

1.16.2.1 After their election the Committees will submit to Council their programme and their proposals to implement FITA goals for the period leading to the next Congress.

1.16.2.2 They shall submit a report for adoption at every Congress meeting.

1.16.2.3 The chairperson of each committee will submit to Council once a year, a plan of committee activities related to FITA goals and a suggested budget to be approved by Council.

1.16.3 There will not be more than two members of a Committee from the same Member Association.

1.16.4 The term of office is four years.

1.16.5 Should any vacancy occur in a Committee, the Executive Committee, in consultation with the relevant Committee, will appoint a new member. Should a member of any Permanent Committee fail to respond to committee matters for a period of six (6) consecutive months, the Executive Committee may declare that member inactive and appoint an additional member to enable that Committee to fulfil its duties. The appointment will be made in consultation with the remaining active members of the relevant Committees. The additional member's term of office will last until the end of that Committee's term of office.

1.16.6 The Chairperson in co-operation with all other members is responsible for seeing that the tasks of his Committee are being properly performed.

1.16.7 Committees will reply to questions concerning the interpretation of rules within their respective field of competence.

1.16.8 Questions can be submitted by Member Associations or by members of Council through the Secretary General who will forward them to the appropriate committee(s).

1.16.8.1 If a question covers a matter relevant to more than one committee, those Committees will examine it together, with the co-ordination of the Chairperson of the Constitution and Rules Committee.

1.16.9 All other replies by Committees will be submitted to the Constitution and Rules Committee which will check they are not contrary to existing rules or Congress de-

cisions and will forward the replies to the Secretary General for immediate distribution to Member Associations, Council, the Permanent Committees, and to all FITA Judges.

1.16.10 These interpretations will be accepted by FITA until confirmed or amended at the next session of Congress and will be incorporated in the FITA Constitution and Rules as appropriate.

1.17 TERMS OF REFERENCE FOR THE PERMANENT COMMITTEES

1.17.1 A Constitution and Rules Committee of three deals with matters covered by the FITA Constitution and Rules covering Eligibility, Championships, Tournaments, Records and Awards.

- The committee will prepare the new Constitution and Rules Book including all the rule changes agreed by Congress and any approved interpretations.
- It will clarify the wording of the rules as well as correct mistakes and omissions.
- The Chairperson of the C&R Committee attends Council meetings with an advisory function but no vote.

1.17.2 A Technical Committee of five deals with matters concerning archery equipment.

The Technical Committee will work in coordination with other relevant Committees.

1.17.3 A Target Archery Committee of three deals with the following matters concerning Outdoor and Indoor Target Archery Tournaments:

- Organization and safety;
- Shooting rules;
- Field layout;
- Development of Target Archery;
- Information about Target Archery;
- Dress.

1.17.4 A Field Archery Committee of three deals with the following matters concerning Field Archery Tournaments:

- Organization and safety;
- Shooting rules;
- Course safety;
- Development of Field Archery;
- Information about Field Archery;
- Dress.

1.17.5 A Judges' Committee (see Appendix 4) of three deals with Congress motions and interpretations of rules concerning judging at official FITA Tournaments and the governing of the judging activities. This Committee is also responsible for:

- Organizing and implementing the education of new FITA Judges and the training of approved FITA Judges through courses and seminars;
- Examining applications of candidates and the re-appointment of Judges;
- Keeping an up-to-date list of FITA Judges;
- Appointing Judges for FITA Championships (article 3.11.2).

1.17.6 A Medical Committee of five deals with all medical issues relating to participation in FITA Archery as a safe sport. At least 3 members, including the chairperson, must be doctors of medicine.

1.17.7 A Development and Technical Assistance Committee of three deals with projects for the introduction of Archery to new countries and with technical assistance programs.

In cooperation with other committees, DTAC organizes programs for Continental Associations and Member Associations such as:

- Youth development;
- Coaching;
- Judging;
- Administrative organization.

1.17.8 An Athletes' Committee of three will bring to the attention of the relevant other Committees matters which, as athletes, they consider to require urgent attention. Members of the Athletes' Committee will have represented their country on at least one occasion during the four years before their election.

1.17.9 A Coaches' Committee of three will bring to the attention of the relevant Committees matters which, as coaches, they consider to require urgent attention. Members of the Coaches' Committee will have represented their country in a coaching or team captain capacity on at least one occasion during the four years before their election.

1.17.10 There will be a Liaison officer nominated by the Continental Associations for each Permanent Committee.

1.17.10.1 The role of the liaison officer is to:

- *Be the first contact between the Permanent Committees and the Continental Associations, and*
- *Act as an advisor, and*
- *Assist in communications.*

1.18 PROCEDURE FOR THE PERMANENT COMMITTEES

1.18.1 The Secretary General will circulate to the Chairperson and all members of the appropriate Committee(s) questions received (in accordance with article 1.16.8 and 1.16.9) and motions and proposals for changing laws and bylaws.

1.18.1.1 The Chairperson will upon receipt of all replies from committee members, decide if further consultation is necessary or if a reply can be drafted.

1.18.1.2 Draft replies will be circulated to the other members of the committee for approval, and the approved text transmitted to the Secretary General for circulation.

1.18.1.3 Draft replies from Permanent Committees will be given to the C&R Committee to ensure the replies are consistent with FITA laws and bylaws before being circulated by the Secretary General to Member and Continental Associations, and all FITA officials.

1.18.1.4 Motions and proposals for changing laws and bylaws shall be referred by the Secretary General to the appropriate Committee(s) for action in accordance with article 1.6.14 and Appendix1 of Book1, article 6.6.

1.19 AD HOC COMMITTEES

1.19.1 Ad Hoc Committees will be created by FITA Council to meet any specific tasks, duties, or new initiatives as deemed appropriate.

1.19.1.1 Such Committees will report annually to FITA Council or, if the task is completed within a 12-month period, at the completion of the task as assigned.

1.19.1.2 The President will appoint the Chairman of the Committee.

1.19.1.3 Ad-hoc Committee members will be appointed by FITA Council and reviewed on an annual basis.

1.20 CONTINENTAL ADVISORY BOARD

1.20.1 The terms of reference will be to:

1.20.1.1 Establish a common purpose and philosophy throughout FITA;

1.20.1.2 Promote and develop archery as a recreational activity and international sport;

1.20.1.3 Exchange ideas and programmes between the Continental Associations and with FITA;

1.20.1.4 Promote the continual co-ordination of the Continental Associations within FITA.

1.21 HONORARY OFFICERS

1.21.1 Congress may elect Honorary Presidents and Honorary Vice Presidents, who will be distinguished persons whom FITA desires to honour, or persons who have distinguished themselves by their work for International Archery.

1.22 AWARDS (see Appendix6 of Book1)

1.22.1 FITA may award Bronze, Silver or Gold Plaquettes and a corresponding lapel pin to persons in recognition of their distinguished service to the administration or the promotion of International Archery.

1.22.2 Proposals for Plaquette awards come from Member Associations or from Council members.

1.22.3 Bronze Plaquettes will be awarded by Council; Silver and Gold Plaquettes will be awarded by Congress.

1.22.3.1 All proposals must be addressed to the Secretary General at least six (6) months before the date of the relevant Council or Congress meeting. Information on the achievements of the person proposed for the award, indicating in detail his or her actions promoting FITA or International Archery will accompany the proposal.

1.22.3.2 All proposals will be reviewed by the Board of Trustees formed by FITA's Honorary Officers, and the members of the Constitution and Rules Committee. A Chairperson will be appointed by the President, in accordance with the guidelines established by Council. The Board's recommendations will be submitted to Council or Congress, as appropriate, and must reach the Secretary General at least thirty (30) days before the relevant Meeting.

1.22.3.3 Past recipients of a Plaquette may only be considered for a more prestigious Plaquette.

1.22.4 Council may give an award to persons outside FITA for outstanding services to FITA.

1.23 SUBSCRIPTION AND LEVIES

1.23.1 The financial year of FITA runs from January 1st to December 31st in any year.

1.23.2 Congress will decide the amount of the yearly subscription fee paid by each Member Association and the currency in which it will be paid.

1.23.3 Subscriptions are payable in advance and will be paid to the FITA Treasurer by January 31st in each year.

1.23.4 Congress may establish levies to be paid by Member Associations.

1.23.5 Membership fees for Associate Members will be decided by the Executive Committee for each individual application.

1.24 REVENUE FROM FITA EVENTS

1.24.1 FITA will have the sole right to arrange and to receive all revenue from all commercial promotion, media coverage and reproduction of FITA Championships. FITA may assign or delegate these rights to a Member Association or other organization at its sole discretion. A Member Association responsible for staging any such competition will ensure that no arrangements in respect to television, film, new media (e.g. internet), photographic coverage or advertising associated with these competitions or their locations shall preclude FITA from concluding its own agreements and at its sole discretion.

1.24.2 FITA will have sole intellectual property rights (trademark, design, and/or copyright).

1.24.2.1 These rights are to:

- *Any design, symbol, logo or text adopted by the Federation from time to time as an official mark, legend, as the mascot or emblem of a specific competition staged under the authority of the Federation. This mark or legend or mascot or emblem shall not be reproduced or displayed without the prior written consent of FITA;*
- *Cups, sculptures, designs, pictures or other items intended to be used as prizes or trophies in any competition or other event staged under the authority of the Federation. They may not be reproduced or displayed without the prior written consent of FITA;*
- *Any competition rules, codes of conduct or training material related to archery and issued by FITA from time to time. Such rules or codes will not be reproduced in the original languages or in translation without the prior written consent of FITA. FITA will have the right to require payment of royalties in respect of any such reproduction. FITA may arrange commercial promotion and reproduction of any of the above marks, prizes or trophies or rules or codes of conduct or training material and may transfer its rights to any other entity. Any revenue or profit arising from such promotion or reproduction or transfer will be the sole property of FITA.*

1.25 AUDITING

1.25.1 The income and expenditure account and balance sheet are to be audited yearly.

1.25.2 Auditor(s) will be appointed by the Executive Committee and the appointment confirmed by Congress.

1.25.3 The auditor(s) must be properly qualified and member(s) of a body of accountants recognized for this purpose in the country concerned.

1.26 EMBLEM, FLAG AND FANFARE

1.26.1 The official emblem of FITA has been adopted by Congress, it belongs to FITA and may be covered by copyright.

1.26.2 The FITA flag will be light blue in colour (target colour blue) with the FITA emblem in colour surmounted by the letters FITA centrally placed.

1.26.3 Member Associations may fly the FITA flag only at Tournaments recognized for World Record and/or FITA Performance Awards and may display it at Member Associations' National Congresses. Each Member Association to provide its own flag for this purpose.

1.26.4 FITA has its official fanfare (see Appendix10 of Book1).

1.27 OFFICE AND ARCHIVES

1.27.1 The official headquarters of FITA is in Switzerland.

1.27.1.1 The official address of FITA is Avenue de Cour 135, 1007 Lausanne, Switzerland.

1.27.1.2 An Executive Office may be set up elsewhere if proposed by the Executive Committee and approved by Council.

1.27.1.3 The Executive Committee shall be responsible for keeping orderly files and archives and for transmitting them in their entirety to the succeeding Executive Committee.

1.28 OFFICIAL LANGUAGES

1.28.1 The official languages of FITA are English and French. In the event of there being a difference of interpretation between English and French texts in any document, the original draft of the document will be referred to for the correct interpretation.

1.28.1.1 Working languages, besides the official languages, may be adopted for Congress Sessions.

1.29 OFFICIAL PUBLICATIONS

1.29.1 The Executive Committee is responsible for the official FITA publications and their distribution.

1.29.1.1. These include:

- *Up-to-date editions of the **FITA Constitution and Rules**;*
- *A circular called **FITA Information** will be issued at least six times a year;*
- *Up-to-date list of **World records***
- *Up-to-date editions of the **FITA Directory;***

1.30 COURT OF ARBITRATION FOR SPORT

1.30.1 An Appeal may be made against a ratified decision of the FITA Board of Justice, the equivalent highest internal tribunal of Member Associations or against decisions concerning Anti-Doping violations (see Book1; App.5; Article 13).

These appeals can only be made for decisions not related to the archery sport regulations as contained in Book 2 - 5 of the FITA Constitution and Rules.

Any appeal shall be made exclusively to the Court of Arbitration for Sport in Lausanne, Switzerland, which will resolve the dispute definitively in accordance with the Code of Sports-related arbitration. The maximum time limit for the appeal is twenty-one (21) days after the receipt of the original decision.

1.31 RESPONSIBILITY

1.31.1 FITA shall in no circumstances accept liability for damages resulting from injury to spectators or to members of any Member Association or from the damage to or loss of property while participating in or attending any championship, tournament or other function organized, sponsored or recognized by FITA.

1.32 RESIGNATION FROM MEMBERSHIP

1.32.1 A Member may resign from FITA by sending it in a registered letter to the Secretary General.

1.32.2 The subscription fee for the current year is to be paid in full whatever the date of resignation.

1.33 SIGNATURE OF FITA

1.33.1 In non-financial matters, FITA is bound by the signature of the President and/or the Secretary General. They may delegate that right to the Executive Director for specific tasks.

1.33.2 For financial transactions, FITA is bound by the signatures of any two of the following persons: the President, the Secretary General, and the Treasurer. Any of these officers may delegate that right to the Executive Director for specific tasks.

1.34 DISSOLUTION OF FITA

1.34.1 In the event of FITA being dissolved for any reason, the assets of the Federation will be divided equally among Member Associations at the time of such occurrence.

1.34.2 Money due to the Federation, but not paid by any Member Association will be deducted from its share before any distribution is made.

CHAPTER 2

ELIGIBILITY CODE FOR ATHLETES AND TEAM OFFICIALS

2.1 ADMISSION

2.1.1 Athletes in archery who wish to participate in Championships, Games, International and National Tournaments, which are recognized, controlled or directed by FITA or a Member Association, who practice the sport in one or more of the various disciplines adopted by FITA, and in accordance with the established laws and bylaws governing archery within FITA, must be affiliated to a Member Association.

2.1.2 To be eligible to participate in the FITA Championships, Awards and World Record Tournaments and such other events as FITA may recognize and specify, athletes must comply with laws and bylaws laid down in the FITA Eligibility Code.

2.1.3 To be eligible to participate in the Olympic Games and Regional or Area Games, an athlete must comply with the Olympic Charter of the International Olympic Committee and its Bye-Laws (see Appendix7) and the FITA Eligibility Code.

2.1.4 Participation in events organized by any individual or association not affiliated to FITA is permitted. The Executive Committee reserves the right to prohibit participation in any event which it determines is prejudicial to the best interest of FITA. Notice of any such prohibitions will be given to Member Associations prior to such event.

2.1.5 No athlete or official who has been declared ineligible may, during the period of ineligibility, participate in any capacity in an Event or activity authorized or organized by FITA or any Member Association.

2.2 ELIGIBILITY CODE (see Appendix7 of Book1)

2.2.1 Athletes will respect the spirit of fair play and non-violence, and behave accordingly on the sports field.

2.2.2 Athletes will refrain from using substances and procedures prohibited by the laws of FITA, the IOC and WADA and will respect and comply in all aspects with the FITA and the World Anti-Doping Code.

2.2.3 An athlete may allow his or her person, name, picture or sport performances to be used for advertising purposes and may accept prizes and/or money without any restriction or limit (see Appendix7 Bye-Law to Rule 45 article 4).

2.2.4 Athletes will comply with the requirements of FITA sponsorship contracts during FITA Championships.

2.2.5 Tobacco and Alcohol advertising and sponsorship are forbidden at FITA World Championships.

2.2.6 Athletes may wear advertising in addition to the normal manufacturer trademarks of the articles worn. The manufacturer's trademark is the registered mark of the company which produced the item. If a company has an item made for it under contract, the label of the item, if appropriate to the item, will correspond to its trademark.

2.2.7 Athletes may have advertising on their personal and technical equipment (e.g. bows, bags, etc.) in addition to the item's normal trademark.

2.2.7.1 All advertising referred to in articles 2.2.6 and 2.2.7 above must not exceed 400 square cm per item. The archers' Registration numbers are not covered by this article.

2.2.7.2 All trademarks referred to in articles 2.2.6 and 2.2.7 above must not exceed 30 square cm except trademarks on bows and stabilizers.

2.2.8 Provisions under articles 2.2.5, 2.2.6, 2.2.7, 2.2.7.1 and 2.2.7.2 are also to be observed by all team officials present on the shooting field.

2.3 MEDICAL PROVISIONS (see Appendix5 of Book1)

2.3.1 Athletes competing in or preparing for Championships, Games, International and National Tournaments recognized, controlled and directed by FITA must agree to submit to a duly authorized doping control or any other medical test or examination decided by FITA.

2.3.1.1 The Gender verification test for all female athletes is carried out at the Olympic Games in accordance with the decisions and instructions of the IOC Medical Commission. The results of this test are not to be made public.

2.3.1.2 FITA may require an athlete to produce a medical certificate to confirm her eligibility in a women's competition.

2.3.2 The FITA medical provisions are intended to safeguard the health of the athlete, and to ensure respect for the ethical concepts implicit in fair play, the Olympic spirit and medical practice.

2.3.3 All participants in FITA Championships and International Tournaments have a right to medical care, to at least the standard received in the home country.

2.4 NATIONAL TEAMS

2.4.1 To be eligible to participate as a member of a National Team in the Olympic Games, Regional or Area Games, FITA Championships, Award and World Record Tournaments and such other events as FITA may recognize and specify, an athlete

must have in his or her possession a valid passport from the country of which he or she is a National Team Member and must not have represented any other Member Association as a National Team Member for at least one year before the date of the competition.

2.4.2 If an athlete wants to become a member of a different National Team he or she must have resided in the new country for at least one year before the date of the competition and must have the written permission of the Member Association, if any, of the country from which he or she has a valid passport.

2.4.3 An athlete who has changed his or her nationality, or acquired a new nationality, may not represent his or her new country until 1 year after such a change or acquisition.

2.4.4 An athlete who is a national of two or more countries at the same time may represent either of them, as he or she chooses. He or she must, however, meet the conditions laid down in articles 2.4.1, 2.4.2 and 2.4.3 above.

CHAPTER 3

CHAMPIONSHIPS

(Details concerning the organization of FITA Championships are contained in the FITA Organizer's Manuals.)

3.1 WORLD CHAMPIONSHIPS

3.1.1 FITA arranges for the organization of the following World Championships:

- Outdoor Target Archery: Recurve and Compound Divisions**;**
- Indoor Target Archery (optional for Juniors): Recurve and Compound Divisions;
- Field Archery (optional for Juniors): Barebow, Recurve and Compound Divisions;
- Junior Outdoor Target Archery (including Cadet): Recurve and Compound Divisions;
- Flight Archery;
- Ski Archery;
- Run Archery;
- 3D Archery (3DI rules);
- Target, Indoor and Field Archery for Masters: Barebow, Recurve and Compound Divisions. (if possible together with other master events)

3.2 CONTINENTAL CHAMPIONSHIPS

3.2.1 A Member Association may belong to only one area (Continental Association). If its territory is situated in more than one area, or in a border area, or for other serious reasons, it may choose the Association to which it will belong.

3.2.1.1 If such Member Association chooses to be listed in a different area, notice must be mailed to the Secretary General at least three (3) years before the Congress at which this change will be announced and become effective. The Secretary General will inform all Members, within two months of the application to change regions.

3.2.2 If the membership of a Member Association in a particular region is disputed, FITA Congress will decide after hearing the Member/Continental Associations concerned.

3.2.3 Continental Associations may arrange for the organization of the Continental Championships.

3.2.3.1 These Continental Championships may be in the disciplines of Outdoor Target Archery, Indoor Target Archery and Field Archery for Classes and Divisions as specified in articles 4.2 and 4.3.

3.3 DATES

3.3.1 FITA World Championships will be held every two years as follows:

- Outdoor Target Archery in odd years;
- Field Archery in even years;
- Indoor Target Archery in odd years;
- Junior and Cadet Outdoor Target Archery in even years.

3.4 ALLOCATION OF CHAMPIONSHIPS

3.4.1 Any organization willing to host a World Championship according to FITA requirements can submit a bid to the FITA Secretary General through the Member Association of the country in which the championship will take place.

3.4.2 The bid must be submitted in writing and must include:

3.4.2.1 The dates.

3.4.2.2 The venue.

3.4.2.3 An assurance that, as far as can be reasonably foreseen, no difficulties will be raised for the participation of archers, teams and officials from any eligible Member Association on grounds of nationality, race, religion or politics and for the free passage through customs of archery equipment or trophies and of FITA technical equipment for the running of the Championship:

3.4.2.4 A bidding contract signed by all parties and approved by Council.

3.4.2.5 A guarantee that they will provide all facilities and comply with all specifications of the respective organizing manual in effect at the time of signing the bid contract.

3.4.2.6 Any other information required by FITA.

3.4.3 The selection of the host country will be made by Congress from the eligible bids, and following a thorough investigation and report by Council. The report will be distributed to all Member Associations before Congress.

3.4.4 Council may allocate a championship, the application for which has not been submitted to Congress four (4) years before the date of the Championship.

3.4.5 If a Member Association has been entrusted with the organization of a FITA Championship and is unable to hold it or to uphold the commitment under article 3.4.2, the Secretary General and all Member Associations must be informed immediately.

3.4.5.1 The host Member Association will be liable for all actual and reasonable expenses directly linked to the failure to host the championship or to uphold the commitments of article 3.4.2.

3.4.6 The possible reallocation of such a Championship will be decided by Congress at its next meeting, if there is at least two years between the date of Congress and the beginning of the year in which the Championship in question is to be held; otherwise Council will make the decision.

3.4.6.1 If a Member Association wishes to change the location of a FITA Championship it may only do so in exceptional circumstances and with the prior approval of the Co-ordination Committee. If the Co-ordination Committee refuses to approve the change of location, the Member Association will continue with the original location or FITA will remove the Championship. In this case the Member Association will be liable for all expenses resulting from the change of country or the cancellation of the Championship.

3.4.7 Congress may establish a maximum limit for the entry fees to FITA Championships.

3.5 MANAGEMENT STRUCTURE

3.5.1 The Championship is managed by the following committees:

- The Co-ordination Committee;
- The Organizing Committee.

3.5.2 The **Co-ordination committee** is made up of :

- The FITA President or his appointed representative who will be the chairperson. This function is mainly to protect the political interest of FITA;
- The FITA Technical Delegate, whose task is to ensure the technical aspects of the Championships;
- The President of the host Member Association or his/her representative;
- The President of the Organizing Committee;
- The FITA Executive Director or his representative. His function is to protect the interest of FITA in terms of marketing, television and media and collect the information necessary for future championships.

3.5.3 The World Championship is managed by the Co-ordination Committee, which is responsible for:

- The supervision and smooth running of the event;
- The implementation of the FITA laws and bylaws;
- Settling any dispute, complaint or protest which does not concern any other committee, or the Jury of Appeal;
- Taking emergency actions to ensure the smooth running of the Championship and protect FITA's reputation;

- Deciding any other matters not covered in the FITA C&R Book;
- Supervising the organization of the ceremonies.

3.5.4 The responsibilities of the Technical delegate will be (in addition to article 3.12):

- To maintain close co-operation with the Chairperson of the Co-ordination committee and with the representative of the Organizing Committee;
- To serve as liaison person between the Chairperson of the Tournament Judge Commission, the Director of Shooting and the Co-ordination Committee and/or the Organizing Committee.

3.5.5 The **Organizing Committee** is responsible for the organization of the Championship and will implement the decisions of the Co-ordination Committee.

3.5.5.1 The Organizers will communicate to FITA sixty (60) days before the Championship the number of press accreditation cards they intend to use.

3.5.6 The Organizing Committee will submit to every Congress, between the date of allocation and that of the Championship, a report on the progress made in the preparations.

3.5.7 The Organizing Committee is totally responsible for making financial arrangements for the Championship allocated to them as:

- Deciding the amount of entry fees – within the limits set by Congress;
- Providing commemorative badges for all athletes and officials;
- Providing non-challenge trophies and prizes at their discretion;
- Bearing the costs of doping control.

3.5.8 FITA will arrange, in agreement with the Organizing Committee, food, lodging and necessary local transportation for the Judges, the cost of which will be borne by the Organizers.

3.5.9 The Executive Director will notify all Member Associations which have entered participants, when a Championship event will not be held for a division or class. Member Associations that have entered participants will be notified of the change no later than forty (40) days before the first day of shooting.

3.5.10 A Technical Delegate will be appointed by FITA in order to advise the Organizing Committee and to check that all preparations are in accordance with FITA Rules.

3.5.10.1 The expenses of the Technical Delegate will be borne by FITA unless other arrangements can be made.

3.5.11 <u>A Results Verifier will be appointed by FITA to assist the Organizing Committee and the Technical Delegate to ensure the validity of target assignments, scoring, verification of results and the publication of the result lists.</u>

<u>3.5.11.1 The expenses of the results verifier are to be met by FITA unless other arrangements can be made.</u>

3.6 INVITATIONS

3.6.1 Invitations will be sent out to Member Associations eligible to compete, to Honorary Officers, Council and the respective Permanent Committee.

3.6.1.1 At least six (6) months before the first day of competition, the Organizers will issue:

- *Invitations to all Member Associations eligible to compete;*
- *Detailed information on the amount of entry fees.*

3.6.1.2 At least three (3) months before the first day of competition, the organizing Member Association will send to all eligible Member Associations:

- *Confirmation that the Championship will be held as announced;*
- *Preliminary entry forms requesting the numbers of expected participants and officials for each event;*
- *Final entry forms requesting names of participants entered for each event, and of officials;*
- *Information on accommodation, booking arrangements, meals, etc., with information on costs.*

3.7 ENTRIES (see Appendix8.1 - 8 of Book1 – Entry forms)

3.7.1 All Member Associations in good standing (see Appendix1 of Book1, article 3.1.6 definition) may enter athletes.

3.7.1.1 Member Associations wishing to enter athletes in a FITA Championship will return the completed entry forms to the Organizers as follows:

- *No later than sixty (60) days before the first day of competition for the Preliminary Entry Form;*
- *No later than twenty (20) days before the first day of competition for the Final Entry Forms;*
- *The names of the members of a national Field team will be communicated to the Organizing Committee before the start of the Field Team Elimination Round.*

3.7.1.2 Entry forms submitted after the specified closing date may be refused by the Organizers; however, if the cause of the delay is due to circumstances beyond the control of the Member Association concerned, the Organizers may accept that entry. The Secretary General must be informed at once of this late acceptance and of the reasons for the delay.

3.7.2 The submission of entry forms implies a declaration that the MA is in good standing (see Appendix1 of Book1, article 3.1.6 definition) and that all athletes' and officials' expenses will be covered by the respective Member Association in case of ill-

ness or accident. All athletes and officials must have signed the FITA Anti-Doping Agreement (see Appendix 5 to Book1, article 20). If this is not the case, athletes from that Member Association will not be eligible to compete in the Championship.

3.7.3 The number of athletes that may be entered by a Member Association is limited.

3.7.3.1 At Outdoor Target Archery Championships, a Member Association may enter no more than four (4) athletes in each category.

3.7.3.2 At Indoor Target Archery Championships, a Member Association may enter no more than three (3) athletes in each class and division.

3.7.3.3 At Field Archery Championships, a Member Association may enter no more than three (3) athletes in each class and division.

3.7.4 A World Championship will not be held for any category for which preliminary entries reflect fewer than twelve (12) individuals and six (6) teams. For the Junior and Cadet categories, the minimum numbers will be eight (8) individuals and four (4) teams.

3.7.4.1 If fewer athletes/teams are entered than the number required for each match play round (see article 4.5), byes will be permitted.

3.7.4.2 A match with a bye is a match that does not take place because not enough athletes are entered for a round to provide opponents for each match of that round. The athlete/team with a bye qualifies for the following round.

3.7.4.3 A forfeited match is a match in which one of the two athletes/teams is not present for the coin toss (when shooting alternately) or in which one athlete/team has not shot any arrows at the end of the first end (both athletes/teams shooting at the same time). The athlete/team not present for the coin toss or not shooting the first end will be declared the loser of that match.

3.7.4.4 Organizers will ask for the date of birth of each athlete of a Junior Class or Cadet Class to be stated on the entry form, and formal proof to be provided.

3.8 ACCREDITATION

3.8.1 The Organizers will issue to each participant and official appropriate accreditation, in accordance with FITA Accreditation Guidelines:

3.8.1.1 The proof of accreditation will be carried at all times on the competition area and must be shown on request of appropriate officials.

3.8.1.2 Only holders of appropriate accreditation will be allowed on to the relevant parts of the competition area.

3.9 CHAMPIONSHIP DOCUMENTS

3.9.1 The Organizers are responsible for producing the following documents:

3.9.1.1 These documents will be distributed before and after the competition.

- *A program for the Championship indicating dates, times and localities of all competitions, ceremonies, occasions and services of interest to athletes and officials; this program must have been approved by the Executive Committee;*
- *Two lists of athletes, one according to Member Association, with the indication of team officials and their championship address, and the other according to target/group and competition numbers;*
- *An interim results' list, to be distributed after each distance, each match or each phase of the competition;*
- *A final, detailed results' list with the indication of all title winners to be distributed within a month of the closing day of the Championship. The scores of all athletes and/or teams will be listed in descending order of the final results. Individual results will be specified for round, distance and double distance as applicable. The final results' list to be distributed by the Organizers to all Member Associations, Honorary Officers, Members of Council and to athletes and officials, through their Member Associations.*

3.10 DIRECTOR OF SHOOTING

3.10.1 The FITA Judge Committee will appoint a Director of Shooting.

3.10.1.1 The Organizing Committee will appoint a Deputy Director of Shooting and, if necessary, one or more Assistants to perform the duties specified in articles 7.7.2 and 8.7.2 as applicable.

3.10.1.2 Their names will be mailed to the Secretary General at least one month before the beginning of the Championships.

3.10.1.3 The Director of Shooting his Deputy and his Assistants will not have other tasks during the hours of competition nor take part in the shooting.

3.11 TOURNAMENT JUDGE COMMISSION

3.11.1 Judging activities at FITA Championships will be coordinated by the Tournament Judge Commission.

3.11.1.1 The number of Judges will be not fewer than one for every seven targets in the Qualification Round of Target Championships and not fewer than one Judge for every four targets in the Qualification Rounds of Field Championships.

3.11.1.2 Judges are expected to be in possession of the equipment specified by the FITA Judge Committee.

3.11.2 Judges will be appointed by the FITA Judge Committee.

3.11.2.1 The FITA Judge Committee will communicate the names to these Judges, the Secretary General and the Organizers no later than ninety (90) days before the first day of the competition. The FITA Judge Committee must receive confirmation of the Judges' availability before making the appointment.

3.11.2.2 If possible, no more than two Judges will be drawn from any one Member Association.

3.11.3 The FITA Judge Committee will appoint one additional Judge as Chairperson.

3.11.4 These Judges will be referred to as the Tournament Judge Commission.

3.11.4.1 The Tournament Judge Commission will co-operate closely with the Technical Delegate.

3.11.4.2 At Field Championships each Judge will be connected by audio communication equipment to the central post (see article 9.1.1.15)

3.11.5 The Tournament Judge Commission, through the chairperson, will present to the Secretary General a report on the tournament.

3.12 TECHNICAL DELEGATE

3.12.1 A Technical Delegate will be appointed by FITA to oversee the technical aspects of Championships.

3.12.1.1 His tasks will be to:

- *Advise the organizers on the FITA rules and the implementation of these rules;*
- *Inspect the sports facilities and the venue equipment to be used during the competition;*
- *Check that all preparations are in accordance with FITA laws and bylaws and the respective Organizer's manual;*
- *Report to FITA Council on a regular basis on the progress of the preparation of the championship;*
- *Supervise and attend the draw;*
- *Organize and chair the Team Captain's meeting;*

- *Co-operate closely with the chairperson of the Tournament Judge Commission and the Director of Shooting;*
- *Ensure that the shooting rules of FITA will be observed;*
- *Advise the Co-ordination Committee on necessary changes to protect the best interests of FITA and the quality of the Championship.*

3.13 JURY OF APPEAL

3.13.1 A Jury of Appeal of three members will be appointed by the Executive Committee for every FITA Championship. Members of the Organizing Committee or persons participating in the Championships are not eligible for the Jury of Appeal.

3.13.2 Appeals against rulings by the Judges must be presented, in writing, by Team Captains, or appellants if no Team Captain has been designated. No appeal can be made against the value of an arrow.

3.13.2.1 An intention to appeal when it might affect the progression of an athlete from one stage of the competition to the next, must be expressed in writing and lodged with the chairperson of the Tournament Judge Commission within 5 minutes of the end of the relevant round or match, whichever comes first. The written appeal must be lodged with the Jury in time to allow the Jury to come to a decision before the beginning of the next round of the competition.

3.13.3 The Jury must be available at all times during the Championship, including the day of Official Practice. During match play competitions the Jury must be present on the competition field.

3.13.4 Jury decisions shall be minuted and submitted to the appealer, the Chairperson of the Tournament Judge Commission and the Organizers before the beginning of the next stage of the competition or before the awarding of prizes.

3.14 SCORING

3.14.1 There will be scorers in sufficient numbers to ensure that each target in a Target Archery Championship has a scorer.

3.14.1.1 These scorers can be athletes when there is more than one athlete per target. Scorers assigned by the Organizers and who do not take part in the shooting, must not become involved in any discussion regarding the value of an arrow. Two athletes from each group at Field Championships will be designated as scorers.

3.14.1.2 The scorers who are not athletes will work under the supervision of one or more officials appointed by the Organizers, who will be responsible for the correct conduct of the scoring.

3.14.1.3 One or more scoreboards, of sufficient size to show the target number, name, code for Member Association and progressive score of at least the first eight in each event must be maintained.

3.14.1.4 In Target Championships, results' lists for all athletes must be published and made available on the field after each distance and/or round. The Organizers are encouraged to display results' lists more frequently if possible.

3.14.1.5 In the case of electronic scoring, manual scorecards must also be kept. The arrow values entered on the manual score cards are the official values.

3.15 TEAM OFFICIALS

3.15.1 At FITA Championships, each Member Association's team taking part will be represented by a Team Captain who may or may not be an athlete.

3.15.1.1 The Team Captain will:

- *Contact the Organizers as soon as possible on arrival;*
- *Attend the Team Captains' Meetings called by the Organizers, the Judges or the Jury of Appeal;*
- *Accompany the team at the inspection of equipment;*
- *Approach, whenever necessary, Organizers, Judges or Jury of Appeal on behalf of the athletes of the team;*
- *Generally represent his or her team in all matters pertaining to the Championship.*

3.15.1.2 A Team Captain may be helped by up to three assistants or coaches, but the total number of officials on the competition field must not exceed the number of two officials for each athlete competing at that time.

3.15.1.3 At Target Championships, Team Officials, unless competing, can be on the field only behind the waiting line and must behave so as not to disturb the athletes (see articles 7.6.1.8 and 8.6.1.6 for exceptions; see articles 7.4.6 and 8.4.6 for coaching).

3.15.1.4 At Field Championships, unless competing, team officials must be confined within the spectator area unless requested by a Judge to enter the competition area.

3.16 DRAW FOR SHOOTING POSITIONS

3.16.1 The Organizers will allocate to each athlete a registration number. These numbers will be worn by the athletes and be shown in the program to enable the spectators and others to recognise them.

3.16.1.1 The registration number will remain unchanged throughout the tournament.

3.16.1.2 The initial allocation of athletes to targets (or shooting groups in Field Archery) and the order of shooting will be arranged by the Organizers. This can be done electronically, or manually as follows:

- *An urn will contain as many cards as there are Member Associations competing, each card bearing the name of one Member Association;*
- *The Chairperson or Secretary of the Organizing Committee will first draw one card;*
- *From another urn the registration numbers of all athletes of that Member Association will be drawn; these will be allocated one to each target (or shooting group) in the order in which they are drawn;*
- *Having finished with one Member Association, another is drawn. The same procedure will continue until all registration numbers have been drawn.*

3.16.1.3 Athletes will be allocated targets and shooting positions as they are drawn, thus:

- *1A, 2A, 3A, 4A, 5A, 6A to the last target*
- *1B, 2B, 3B, 4B, 5B, 6B to the last target*
- *1C, 2C, 3C, 4C, 5C, 6C to the last target*

In Field Championships athletes will be allocated shooting groups as they are drawn, thus:

- *1A, 3A, 5A, 7A 2A, 4A, 6A, 8A to the last group*
- *1B, 3B, 5B, 7B 2B, 4B, 6B, 8B to the last group*
- *1C, 3C, 5C, 7C 2C, 4C, 6C, 8C to the last group*

Women and men, and when applicable, different divisions, will be drawn separately.

3.16.1.4 In order that athletes from the same team may all be placed on adjoining targets or shooting groups, alterations to the drawn order may be made by the Organizers if possible; these alterations will be minuted and the minutes given to, and approved by, the Technical Delegate and the Judges before they are distributed.

3.16.1.5 Lists of athletes, according to target/group order and alphabetical order will be made available to all FITA officers, Judges and athletes and officials at least two days before the first day of competition.

3.16.1.6 Substitutions of entries will be allowed until the day before Official Practice.

3.16.1.7 The minutes of the proceedings will be handed to the Technical Delegate at the Team Captains' meeting before the tournament.

3.16.1.8 Team officials and athletes may attend the draw but will not have the right to speak except for Team Captains requesting consideration of article 3.16.1.4.

3.17 REPOSITIONING ON TARGETS

3.17.1 At Target and Field Championships, athletes will be repositioned as follows:

3.17.1.1 For the Qualification Round, Judges may alter the target assignment so that there will be no more than one athlete from the same Member Association on one target. Under no circumstances will more than two archers from the same Member Association be assigned to a target.

3.17.1.2 In Target Archery Championships the athletes will be seeded into the FITA Match play Chart (see Appendix11 of Book1) according to the position reached in the Qualification Round.

3.17.1.3 At Field Championships after the first day of the Qualification Round and after each subsequent Round according to the position reached. Under no circumstances will more than two archers from the same Member Association be assigned to a target with the exception of the Finals Round.

3.17.1.4 The athletes will retain the same registration numbers throughout the tournament (see article 3.16.1.1).

3.18 CONTROL OF EQUIPMENT

3.18.1 On the day before the first day of competition, the Organizers will arrange, on or near the practice field, for the inspection by the Judges of all the equipment including spares and accessories that each athlete intends to use during the competition.

3.18.1.1 Teams will be called in alphabetical order and all athletes will be accompanied by their Team Captain.

3.18.1.2 Judges may request equipment to be modified or changed if found to contravene FITA rules.

3.19 PRACTICE

3.19.1 At Indoor and Outdoor Target Championships, practice may take place on the Tournament range.

3.19.1.1 For Outdoor Target Championships, this practice will be for a minimum of twenty (20) minutes and a maximum of forty-five (45) minutes on all days of the Qualification Round. However, all practice must cease fifteen (15) minutes before the competition starts. Practice ends with the pulling of the practice arrows. The

practice targets will be set up at the first distance to be shot by each class.

When shooting the Elimination Round and Finals Round, the Organizers may decide on the length of the practice period taking into account the schedule for each day.

At other FITA events practice will be for a maximum of forty-five (45) minutes but may be less, and the competition will start as soon as possible.

3.19.1.2 *For Indoor Target Championships, this practice will be for a minimum of twenty (20) minutes and a maximum of forty-five (45) minutes on all days of the Qualification Round. The practice must cease fifteen (15) minutes before the competition starts. When shooting the Elimination Round and Finals Round, the Organizers may decide on the length of the practice period considering the schedule of each day.*

At other FITA events practice will be for a maximum of forty-five (45) minutes but may be less and the competition will start as soon as possible.

3.19.1.3 *Other practice facilities must be made available to athletes at least five days before the beginning of the competition.*

3.19.1.4 *At Outdoor and Indoor Target championships a practice field must be available on the days of the Finals Round for those athletes eliminated from the Finals Round who may still compete in the Team event.*

3.19.1.5 *Targets in the same direction as the competition field will be provided for archers (teams) to practice during their byes or forfeited matches. This can be a special unused portion of the competition field.*

3.19.1.6 *For the Olympic and Match play Round, a practice field will be made available alongside the Competition Field where athletes, still in the competition, may practice during the Elimination and Finals competition.*

3.19.2 At Field Championships no practice will be permitted on the courses set out for the competition.

3.19.2.1 *A practice range will be made available nearby or elsewhere for at least a week before the first day of competition.*

3.19.2.2 *On the days of the Tournament, some warm up targets must be set up near Assembly Point(s) for the athletes. The practice range and the warm up targets may be one and the same.*

3.19.2.3 *On the practice field a number of targets equal to one eighth of the entries, arranged at all the different competition distances, will be provided to permit practice, before, during and after competitive shooting on each day of the competition, at times announced by the Organizers.*

3.19.3 For all Championships:

3.19.3.1 Should the practice field be insufficient for the number of athletes, the Organizers may arrange two or three practice sessions a day, of at least four hours each. Attendance at these sessions may be booked up to 24 hours in advance. Bookings for more than one session a day for the same athlete may only be accepted if this does not prevent any other athlete booking a first practice period at the session of choice.

3.19.3.2 A Director of Shooting must be in charge of the official practice field at all times. Acoustic signals will be given to indicate when all shooting must stop in order to allow athletes to collect their arrows, and when shooting can be resumed.

3.19.3.3 Upon the Director of Shooting sounding the acoustic signal, all athletes will move forward to collect their arrows. No athlete may shoot during this time. Athletes contravening this rule may be barred from the practice session.

3.19.3.4 Any change in the distance at which targets are set, must be with the prior permission of the Director of Shooting, who may ask athletes to assist in moving and re-arranging targets, should it be necessary.

3.20 CHAMPIONSHIP TOURNAMENTS

3.20.1 Outdoor Target Archery Championships will be decided on a Qualification Round consisting of a single FITA Outdoor Target Round followed by an Olympic Round. The schedule will depend on the number of athletes per class and division, and the space available.

3.20.2 Indoor Target Archery Championships will be decided on a Qualification Round consisting of the 18m FITA Indoor Round followed by an Indoor Match Round. The schedule will depend on the number of athletes per class and division, and the space available.

3.20.3 Field Archery Championships will be decided on a FITA World Championship Field Round.

3.20.4 Archery competitions may be shot at nighttime provided suitable lighting conditions can be supplied and athletes can practise under such conditions.

3.20.5 The President may adjust the schedule of Championships or Games to accommodate any reasonable requirement of TV broadcasters. Such an adjustment is to be made with the cooperation of the Organizers. Any adjustment must take into account, as a priority, the interests of the athletes who must be informed of changes as soon as possible.

3.20.6 Tobacco and Alcohol advertising and sponsorship are forbidden at FITA World Championships.

3.21 PROGRAM AND PROTOCOL

3.21.1 The Program and Protocol will be established by the Co-ordination Committee and be published in the invitation to the Championships.

3.21.1.1 The program of a championship will include:

- *Team Captains' Meeting;*
- *Equipment Inspection;*
- *Official Practice;*
- *Opening Ceremony;*
- *Competition;*
- *Award Ceremonies;*
- *Closing Ceremony;*

All carried out in accordance with the guidelines of the Organizers' Manual.

3.22 DRESS REGULATIONS

3.22.1 FITA Championships are majestic occasions, honoured by the attendance of many dignitaries. It is therefore respectful and fitting that all athletes, Team Captains, Officials, etc., participating in the Opening and Closing Ceremonies, should be properly and fully dressed in the uniform dress of their respective Member Associations.

3.22.1.1 During the competitions:

- *Women are required to wear dresses, skirts, divided skirts, shorts or trousers (slacks), and blouses and tops (which will cover the front and back of the body and be fixed over each shoulder).*
- *Men are required to wear full-length trousers or shorts and long or short sleeved shirts.*
- *Shorts may not be shorter than the athlete's fingertips when the arms and fingers are extended at the athlete's side.*
- *Sweaters / cardigans may be worn.*
- *Tracksuits supplied to the team, as official uniform will be permitted.*
- *All members of one team, men or women must be dressed in the same Team uniform.*

3.22.1.2 Footwear must be worn by all athletes at all times during the tournament.

3.22.1.3 Athlete's registration number is to be prominently displayed and to be visible at all times while shooting is in progress.

3.22.1.4 Athletes are permitted to wear clothing, etc., on which appears the name and/or the official insignia, flag or emblem of the country they represent, without restriction as to size.

3.22.2 No advertising of any kind whatsoever will appear on clothing worn by the athletes or officials at any time during the tournament except as specified in the eligibility rules.

CHAPTER 4

COMPETITIONS

4.1 DISCIPLINES

4.1.1 Competition in the Sport of Archery is classified in the following disciplines:

- Outdoor Target Archery;
- Indoor Target Archery;
- Field Archery;
- Run Archery;
- Clout Archery;
- Flight Archery;
- Ski-Archery;
- 3D Archery (FITA 3D and 3DI).

4.2 CLASSES

4.2.1 FITA recognizes the following classes:

- Women;
- Men;
- Cadet Women;
- Cadet Men;
- Junior Women;
- Junior Men;
- Masters Women;
- Masters Men.

4.2.2 Separate events for Junior and Cadet Women, Junior and Cadet Men, Masters Women and Masters Men can be recognized by FITA in the disciplines of Outdoor Target, Indoor Target, Field Archery.

4.2.3 An athlete may participate in a Cadet Class in tournaments when the competition takes place up to and in the year of his or her 16th birthday.

4.2.3.1 A Cadet athlete may choose to compete in the Junior or Men's / Women's class at his/her discretion.

4.2.4 An athlete may participate in a Junior Class in tournaments when the competition takes place up to and in the year of his or her 18th birthday.

4.2.4.1 A Junior athlete may choose to compete in the Men's / Women's class at his/her discretion.

4.2.5 An athlete may participate in a Masters Class in tournaments when the competition takes place in the year of his or her 50th birthday and thereafter.

4.2.5.1 A Masters athlete may choose to compete in the Men's / Women's class at his/her discretion.

4.3 DIVISIONS

4.3.1 Athletes using different types of bows are grouped in separate divisions and compete in separate events. FITA recognizes the following Divisions:

4.3.2 For Outdoor Target Archery:

- Recurve Division as specified in article 7.3.1;
- Standard Bow Division with equipment as specified in article 7.3.2;
- Compound Division with equipment as specified in article 7.3.3.

4.3.3 For Indoor Target Archery:

- Recurve Division with equipment as specified in article 8.3.1;
- Compound Division with equipment as specified in article 8.3.2.

4.3.4 For Field Archery:

- Recurve Division with equipment as specified in article 9.3.1 - 9.3.11;
- Compound Division with equipment as specified in article 9.3.1 - 9.3.11;
- Barebow Division with equipment as specified in article 9.3.1 - 9.3.11;
- For non-Championship divisions see Chapters 9.3.1 – 9.3.11; 11.4.2; 11.10.2.

4.3.5 For Clout Archery (see article 11.5):

- Recurve Division;
- Compound Division.

4.3.6 For Flight Archery (see article 11.6):

- Target Recurve Bow;
- Conventional Flight Bow;
- American Longbow;
- English Longbow;
- Compound Flight Bow;
- Compound Target Bow;
- Foot Bow.

4.3.7 Athletes may compete in different divisions of the same event but under no circumstances may the program of the event be modified or the event be held up to accommodate that athlete.

4.4 CATEGORIES

The combination of a class and a division is called 'Category' as follows:

Recurve Women	RW	Recurve Junior Women	RJW
Recurve Men	RM	Recurve Junior Men	RJM
Recurve Master Women	RMW	Recurve Cadet Women	RCW
Recurve Master Men	RMM	Recurve Cadet Men	RCM
Compound Women	CW	Compound Junior Women	CJW
Compound Men	CM	Compound Junior Men	CJM
Compound Master Women	CMW	Compound Cadet Women	CCW
Compound Master Men	CMM	Compound Cadet Men	CCM
Barebow Women	BW	Barebow Junior Women	BJW
Barebow Men	BM	Barebow Junior Men	BJM
Barebow Master Women	BMW	Barebow Cadet Women	BCW
Barebow Master Men	BMM	Barebow Cadet Women	BCM

4.5 ROUNDS

4.5.1 OUTDOOR TARGET ARCHERY ROUNDS

4.5.1.1 The FITA Outdoor Target Archery Rounds may be shot by both the Recurve and Compound Division in separate divisions. In the Olympic Games only the Recurve Division may compete. The FITA Standard Round may only be shot by athletes of the FITA Standard Bow Division.

4.5.1.2 The FITA Outdoor Target Archery Round, consists of 36 arrows from each of the following distances shot in this order:

- 60, 50, 40, 30 meters for Cadet Women;
- 70, 60, 50, 30 meters for Women, Cadet Men, Junior Women and Masters Women;
- 90, 70, 50, 30 meters for Men, Junior Men and Masters Men;

or in the order:

- 30, 40, 50, 60 meters for Cadet Women;
- 30, 50, 60, 70 meters for Women, Cadet Men, Junior Women and Masters Women;
- 30, 50, 70, 90 meters for Men, Junior Men and Masters Men.

The 122cm target face is used for the 90,70, 60m (and 50m for Cadet Women) distances and the 80cm face shall be used for the 50 (other than Cadet Women), 40 and 30m distances. The 80cm multiple center set-up may be used at 30 meters. The 80cm triangular triple center set-up is mandatory at FITA Championships.

4.5.1.3 The Double FITA Outdoor Target Archery Round consists of two (2) FITA Outdoor Target Rounds shot consecutively.

4.5.1.4 The Olympic Round consists of:

- The Elimination Round**,** in which the top sixty-four (64) women and top sixty-four (64) men are seeded according to their positions in the Qualification Round (see Match play Chart Appendix 11 and Book2; Appendix 1.1). They shoot a series of matches in groups, each match consisting of three (3) ends of six (6) arrows shot in four (4) minutes at 70 meters (60m for Cadet Men and Women) on 122cm target faces;
- The Finals Round**,** in which the top eight (8) women and top eight (8) men remaining from the Elimination Round shoot individual matches, each match consisting of four (4) ends of three (3) arrows at 70 meters (60m for Cadet Men and Women) on 122cm target faces, culminating in the Gold Medal match. At FITA Outdoor Target Championships the matches will be shot one after the other. The athletes will alternate shooting one (1) arrow at a time, 40 seconds per arrow;
- The Team Elimination Round**,** in which the top sixteen (16) teams of three (3) athletes (16 women's teams and 16 men's teams) seeded according to their positions as determined by their total score in the Qualification Round (see Match

play Chart Appendix 11 and Book 2; Appendix 1.3), shoot simultaneously a series of matches, each match consisting of three (3) ends of nine (9) arrows (3 per archer) shot in three minutes at 70 meters (60m for Cadet Men and Women) on 122cm target faces;

- The Team Finals Round**,** in which the top four (4) teams of women and the top four (4) teams of men remaining from the Elimination Round shoot a series of individual matches, each match consisting of three (3) ends of nine (9) arrows (3 per archer) shot in three minutes at 70 meters (60m for Cadet Men and Women) on 122cm target faces, culminating in the Team Gold Medal match. In the Olympic Games the teams shoot alternately in three arrow segments. The timing is started and stopped when the athlete crosses the 1-meter line.
- The Olympic Competition format may be amended to fit special stadiums and locations that are very attractive for archery. It is necessary to notify Member Associations at least one year in advance of the event.

4.5.1.5 The Olympic Round for Cadets is shot at 60 meters on 122cm target faces.

4.5.1.6 The FITA 60 Meter Round for Cadets consists of 72 arrows shot at 60 meters on the 122cm target face.

4.5.1.7 The FITA 70 Meter Round consists of 72 arrows shot at 70 meters on the 122cm target face.

4.5.1.8 The Half FITA Round consists of eighteen (18) arrows shot from each of the distances of the FITA Outdoor Target Round.

4.5.1.9 The FITA 900 Round consists of thirty (30) arrows from each of the following distances on the 122cm target face:

60, 50, 40 meters for all Classes.

4.5.1.10 The FITA Standard Round consists of thirty-six (36) arrows at 50 meters and thirty-six (36) arrows at 30 meters, shot outdoors in ends of three (3) arrows on ten-zone 122cm diameter faces at both distances.

4.5.1.11 The Outdoor Duel Match Round shot at 70 meters on the 122cm target face (see chapter 11.2).

4.5.1.12 The Outdoor Club Round (see Chapter 11.1).

4.5.2 INDOOR TARGET ARCHERY ROUNDS

4.5.2.1 FITA Indoor Target Rounds may be shot by both the Recurve and Compound Divisions in separate Divisions.

4.5.2.2 The 25 meter FITA Indoor Round consists of 60 arrows on 60cm diameter faces or the 60cm triple center set-up for all classes.

4.5.2.3 The 18 meter FITA Indoor Round consists of 60 arrows on 40cm diameter faces or 40cm triple faces for all classes.

4.5.2.4 The Combined FITA Indoor Round consists of the above two rounds shot in succession in the order listed above.

4.5.2.5 The Indoor Match Round is shot on 40cm triple faces and consists of:

- The Elimination Round**,** in which the top thirty-two (32) women and top thirty-two (32) men are seeded according to their positions in the Qualification Round (see Match play Chart Appendix 11 and Book3, Appendix 1.1). They shoot a series of matches, each match consisting of six (6) ends of three (3) arrows shot in two (2) minutes at 18 meters;
- The Finals Round, in which the top 8 women and top 8 men remaining from the Elimination Round shoot a series of individual matches, each match consisting of four (4) ends of three (3) arrows shot at 18 meters, culminating in the Gold Medal match. The athletes will alternate shooting one arrow at a time, 40 seconds per arrow;
- The Team Elimination Round, in which the top 16 teams of three (3) athletes (16 women's teams and top 16 men's teams) seeded according to their positions as determined by their total scores in the Qualification Round (see Match play Chart Appendix 11 and Book3, Appendix 1.2), shoot simultaneously a series of matches, each match consisting of three (3) ends of nine (9) arrows (3 per athlete) shot in three (3) minutes at 18 meters;
- The Team Finals Round, in which the top four (4) teams of women and top four (4) teams of men remaining from the Elimination Round shoot a series of individual matches, each match consisting of three (3) ends of nine (9) arrows (3 per athlete) shot in three (3) minutes at 18 meters, culminating in the Team Gold Medal match.

4.5.2.6 Vertical triple faces will be mandatory for the Indoor World Championships.

4.5.2.7 The Duel Match Round shot entirely on the 40cm diameter vertical triple faces (see Chapter 11.2).

4.5.2.8 The Indoor Club Round (see Chapter 11.1).

4.5.3 THE FIELD ARCHERY ROUNDS

4.5.3.1 The FITA Field Archery Rounds may be shot by the Barebow, Recurve and Compound Divisions, in separate divisions. See Chapter 11.4.2 for non-Championship divisions in local tournaments.

4.5.3.2 The FITA Field Round consists of any number of targets totalling between 12-24 targets which is divisible by four (4), and three (3) arrows to be shot per target. These targets will be arranged along a course with such difficulties in aiming and shooting as the terrain presents and the spirit and traditions of the discipline require. The distances for target butts are set out in articles 4.5.3.7 and 4.5.3.8. The course may be marked or unmarked and be shot with any number of walk-ups or fan targets.

4.5.3.3 The FITA Arrowhead Round consists of any number of targets totalling between 24-48 targets which is divisible by four (4), that is, two complete FITA Field Rounds. The distances are set out in articles 4.5.3.7 and 4.5.3.8 The rounds may be shot on marked and unmarked courses or one of each.

4.5.3.4 The FITA Forest Round consists of any number of targets totalling between 12-24 which is divisible by four (4), with up to three (3) arrows per target. The Round is normally shot on unmarked courses but may be shot on marked courses provided the distances are kept within the limits set out in Chapter 11.4.3.2.

4.5.3.5 The FITA 3D Animal Round (see Chapter 11.3).

4.5.3.6 The FITA Field Archery World Championship Round in which there are no walk-up or fan targets, consists of:

- The Qualification Round, two FITA Field Rounds each of 24 targets, one marked and one unmarked course;
- The Elimination Round in which the top sixteen (16) athletes in each class and division shoot twelve (12) targets, 3 arrows per target, six (6) marked and six (6) unmarked targets. The top eight (8) athletes in each class and division will then shoot twelve (12) targets, 3 arrows per target, six (6) marked and six (6) unmarked targets;
- The Finals Rounds in which the top four (4) athletes in each class and division shoot two (2) matches (the semi finals and the medal finals) consisting of four (4) marked targets each, three (3) arrows per target. (see 4.5.3.10)

4.5.3.6.1 In the first match the number one (1) athlete shoots against the number four (4) athlete and the number two (2) athlete shoots against the number three (3) athlete.

The losers move to the Bronze Medal Match, and the winners move to the Gold Medal Match.

<u>The four athletes shooting the matches will go in 2 separate groups through the course accompanied by a Judge.</u>

<u>In the semi finals, the pair consisting of athletes # 2 and 3 will shoot first and, the pair consisting of athlete # 1 and 4 will shoot as soon as the target is cleared.</u>

In the medal finals, the athletes shooting in the gold medal match will shoot first with the athletes shooting in the bronze medal match shooting as soon as the target is cleared. However, at the final target, the athletes shooting the Bronze medal match will shoot first. When the bronze medal match is completed and the target is cleared, the gold medal match will be completed.

- The Team Elimination Round (Quarter Finals) consists of the top eight (8) teams in each class, consisting of three (3) athletes, one athlete from each division.

  4.5.3.6.2 They are seeded according to the positions as determined by their total scores in the Qualification Round They shoot four (4) matches each of eight (8) marked targets. Each athlete shoots one (1) arrow per target from the post of his or her division. (see match play chart). The winners of each match proceed to the Team Finals Round.

- The Team Finals Rounds consist of the top four (4) Teams (Semi-Finals) in each class, consisting of one (1) athlete from each division.

  4.5.3.6.3 They shoot two (2) matches of four (4) marked targets each. Each athlete shoots one (1) arrow per target from the peg of his or her division. The losing teams move to the Bronze Medal Match and the winning teams move to the Gold Medal Match (Medal Finals). Both Medal matches are shot on an additional four (4) marked targets (see individual finals for shooting procedures).

  4.5.3.6.4 In the Finals Round the highest ranked athlete/team will shoot from the left shooting position.

  4.5.3.6.5 A Round may be shot going twice over the same unit of targets, except at FITA Championships.

  4.5.3.6.6 Whenever possible the shooting pegs should be combined.

  If a course consists of 24 (2x12) targets, the numbers in the table below, showing a unit of 12 targets are multiplied by 2. If a course consists of 16 targets add another target of the middle distances for each target face size. On courses with 20 targets add two targets of the short and the long distances for each target face size.

4.5.3.7 Unit for Unmarked Course

		Distances in Meters	
Number of Targets	Diameter of Field Faces in cm	Blue Peg Barebow	Red Peg Recurve and Compound
3	Ø 20	5 - 10	10 - 15
3	Ø 40	10 - 20	15 - 25
3	Ø 60	15 - 30	20 - 35
3	Ø 80	30 - 45	35 - 55

4.5.3.7.1 The distances of the three targets of the same size should vary between long, medium and short distances.

4.5.3.8 Unit for Marked Course

		Distances in Meters	
Number of Targets	Diameter of Field Faces in cm	Blue Peg Barebow	Red Peg Recurve and Compound
3	Ø 20	5 - 10 - 15	10 - 15 - 20
3	Ø 40	15 - 20 - 25	20 - 25 - 30
3	Ø 60	30 - 35 - 40	35 - 40 - 45
3	Ø 80	40 - 45 - 50	50 - 55 - 60

4.5.3.9 Unit for Elimination Round

(marked and unmarked) 2 X 6 targets, each unit of 6 targets will contain 3 marked and 3 unmarked distances:

			Distances in Meters	
Number of Targets	Diameter of Field Faces in cm	Number of Faces	Blue Peg Barebow	Red Peg Recurve and Compound
1	Ø 20	12	5 - 10	10 - 15
1	Ø 40	4	10 - 20	15 - 25
1	Ø 60	1	15 - 30	20 - 35
1	Ø 80	1	30 - 45	35 - 55
1	Ø 40	4	10 - 20	15 - 25
1	Ø 60	1	15 - 30	20 - 35
1	Ø 60	1	30	35
1	Ø 80	1	45	55
1	Ø 20	12	10	15
1	Ø 40	4	20	25
1	Ø 60	1	40	45
1	Ø 80	1	50	60

4.5.3.10 Unit for Finals Rounds (and Team Quarter Finals)
8 (2 x 4) targets with marked distances:

			Distances in Meters	
Number of Targets	Diameter of Field Faces in cm	Number of Faces	Blue Peg Barebow	Red Peg Recurve and Compound
1	Ø 20	12	15	20
1	Ø 40	4	25	30
1	Ø 60	2	35	40
1	Ø 80	2	45	55
1	Ø 20	12	10	15
1	Ø 40	4	20	25
1	Ø 60	2	40	45
1	Ø 80	2	50	60

4.5.3.10.1 For the Finals Rounds 'hit or miss' scoring may be applied (see article 9.2.1.3) and if available knock-down targets be used if a detailed explanation is included in the invitation (see article 3.6.1.1).

4.5.3.10.2 The targets may be put up in any order but the last four targets of this chart will be used for the Gold Medal Match.

4.5.3.10.3 In the Finals Rounds each class and division will form a group that will start in this order:

- *Barebow Women;*
- *Barebow Men;*
- *Recurve Women;*
- *Recurve Men;*
- *Compound Women;*
- *Compound Men.*

4.5.3.10.4 The Finals Rounds should be shot in one continuous round, re-organizing the groups after the fourth target. In case of a tie in the Semi-Finals, the tie should be decided on the fourth target before the reorganization of the groups takes place. The Organizers may allow the different classes to shoot on separate courses to speed up the competition.

4.5.3.10.5 The above groups start at target number 1 of the finals course as soon as possible. The award ceremony of a divisions will be held as soon as all divisions have arrived and the scores have been checked. All finalists are to be present during the ceremony and they may bring their equipment with them.

4.5.3.11 Forest Round (see Chapter 11.4)

4.5.3.12 Field Club Round – Handicap System (see Chapter 11.9)

4.5.4 SKI-ARCHERY

4.5.4.1 Ski-Archery is a discipline that combines cross-country skiing and archery. (see Chapter 10)

4.5.5 THE CLOUT ROUND

4.5.5.1 see Chapter 11.5

4.5.6 FLIGHT SHOOTS

4.5.6.1 see Chapter 11.6

4.5.7 THE 3D ROUNDS

4.5.7.1 see Chapter 11.3 (FITA 3D) and 11.10 (3DI)

4.5.8 THE RUN-ARCHERY ROUNDS

4.5.8.1 The Run-Archery Rounds combine cross-country running and Archery. (see Chapter 11.8)

4.6 EVENTS AND TOURNAMENTS

4.6.1 A competition, for which a separate list of results and separate set of prizes and/or titles can be given, is called an event.

4.6.2 A tournament is an organized competition consisting of one or more events.

4.6.2.1 Where tournaments consist of events belonging to more than one discipline, as specified in article 4.1, the program will follow the order in which the disciplines are listed.

4.6.3 No athlete, other than a member of a Member Association affiliated to FITA, may compete in tournaments recognized by FITA.

4.7 FITA EVENTS

4.7.1 Only tournaments consisting of one or more of the following events, as described in detail in the relevant article on the shooting rules, can obtain official recognition from FITA.

4.7.2 In the discipline of **Outdoor Target Archery**:

- For the Recurve and Compound Divisions for the Women's, Men's, Cadet Women's, Cadet Men's, Junior Women's, Junior Men's, Masters Women and Masters Men classes:
  - The FITA Outdoor Target Round;
  - The FITA Outdoor Target Round for Teams;
  - The Double FITA Outdoor Target Round;
  - The Double FITA Outdoor Target Round for Teams;
  - The FITA 70 Meters Round;
  - The FITA 60 Meters Round for Cadets;
  - The FITA 70 Meters Round for Teams;
  - The FITA 60 Meters Round for Cadet Teams;
  - The Olympic Round;
  - The Olympic Round for Cadets;
  - The Olympic Team Round;
  - The Olympic Team Round for Cadets.
- For the Standard Bow Division:
  - FITA Standard Round for Women;
  - FITA Standard Round for Men;
  - FITA Standard Round for Cadet Women;
  - FITA Standard Round for Cadet Men;
  - FITA Standard Round for Junior Women;
  - FITA Standard Round for Junior Men.

4.7.3 In the discipline of **Indoor Target Archery:**

- For the Recurve and Compound Divisions for Women, Men, Junior Women and Junior Men, (Cadet Women and Cadet Men), Masters Women and Masters Men:
  - The 25 meter FITA Indoor Round;
  - The 18 meter FITA Indoor Round;
  - The Combined FITA Indoor Round;
  - The Indoor Match Round;
  - The Indoor Match Team Round.

4.7.4 In the discipline of **Field Archery**:

- For the Barebow, Recurve and Compound Divisions for the Women's, Men's, Junior Women's and Junior Men's, Masters Women and Masters Men classes:
  - FITA Field Round;
  - FITA World Championship Field Round;
  - FITA Arrowhead Round.

4.7.5 In the discipline of **Ski Archery**

- see Chapter 10

4.7.6 In the discipline of **Clout Archery:**

- see Chapter 11.5

4.7.7 In the discipline of **Flight Archery:**

- see Chapter 11.6

4.7.8 In the discipline of **3D Archery**

- see Chapter 11.3 (FITA 3D) and 11.10 (3DI)

4.7.9 In the discipline of **Run Archery**

- see Chapter 11.8

4.8 OFFICIAL RECOGNITION OF TOURNAMENTS

4.8.1 FITA gives official recognition to tournaments for one or more of the following purposes:

- Competition for World titles (World Championships);
- Competition for Olympic titles (Olympic Archery Tournament);
- Competition for World Ranking*;*
- Registration for World Records,
- Competition for FITA Performance Awards (FITA Star, FITA Arrow, FITA Target and FITA Arrowhead Awards);
- Inclusion of the official calendar of major international archery events;
- The gaining of Olympic qualification.

4.8.2 The organization of FITA Championships (article 4.8.1 above) is set out in Chapter 3.

4.8.2.1 In order to obtain official recognition, tournaments must conform to the standards of organization set out in the appropriate articles for each type of recognition in respect of:

- *Registration with FITA;*
- *Announcement and/or invitations;*
- *Participation of athletes from other Member Associations;*
- *Order of shooting (target/group list);*

- *Judging;*
- *Publication of results.*

4.8.2.2 *Member Associations, wishing to obtain official FITA recognition for a tournament must announce it in writing to the Secretary General within the specified time and including:*

- *The name of the tournament, if any;*
- *The events it includes;*
- *A clear geographic indication of the venue (e.g., town or province);*
- *Whether or not the tournament is open to teams and/or individual members of other Member Associations.*

4.8.2.3 *Changes in the information requested under article 4.8.2.2 can only be accepted by the Secretary General if announced at least thirty (30) days before the first day of shooting.*

4.9 WORLD RECORD TOURNAMENTS

4.9.1 All Tournaments for the disciplines of Outdoor and Indoor Target Archery complying with articles 6.4.5 and 6.4.6 will also be valid for recognition of World Records as defined in Chapter 5.

CHAPTER 5

TITLES AND RECORDS

5.1 WORLD CHAMPIONSHIP TITLES

5.1.1 Outdoor Archery World Championships for the Recurve and Compound Divisions:

- Woman Champion of the World;
- Man Champion of the World;
- Women's Champion Team of the World;
- Men's Champion Team of the World;
- Cadet Woman Champion of the World;
- Cadet Man Champion of the World;
- Cadet Women's Champion Team of the World;
- Cadet Men's Champion Team of the World.
- Junior Woman Champion of the World;
- Junior Man Champion of the World;
- Junior Women's Champion Team of the World;
- Junior Men's Champion Team of the World;
- Masters Woman Champion of the World;
- Masters Men Champion of the World.

5.1.2 Indoor Archery World Championships for the Recurve and Compound Divisions:

- Woman Champion of the World;
- Man Champion of the World;
- Women's Champion Team of the World;
- Men's Champion Team of the World;
- Junior Women's Champion of the World;
- Junior Men's Champion of the World.
- Junior Women's Champion Team of the World;
- Junior Men's Champion Team of the World.
- Masters Woman Champion of the World;
- Masters Men Champion of the World.

5.1.3 Field Archery World Championships for the Barebow, Recurve and Compound Divisions:

5.1.3.1 Individual Titles:

- Woman Champion of the World;
- Man Champion of the World;
- Junior Woman Champion of the World;
- Junior Man Champion of the World;
- Masters Woman Champion of the World;
- Masters Men Champion of the World.

5.1.3.2 Team Titles (1-Barebow, 1-Recurve and 1-Compound):

- Women's Champion Team of the World;
- Men's Champion Team of the World;
- Junior Women's Champion Team of the World;
- Junior Men's Champion Team of the World.

5.1.4 Ski Archery

See Chapter 10

5.1.5 3D Archery (3DI)

- Woman Champion of the World;
- Man Champion of the World;
- Women's Champion Team of the World;
- Men's Champion Team of the World.

5.1.6 Flight Archery

See Chapter 11.6 for divisions

- Woman Champion of the World;
- Man Champion of the World;
- Junior Woman Champion of the World;
- Junior Man Champion of the World.

5.1.7 Run Archery

See Chapter 11.8

5.2 WORLD RECORDS - DEFINITION

5.2.1 A new record will be established when a score is at least one point higher, or in Flight Shooting, the distance shot is one centimeter further, than an existing Record.

5.2.2 In case of a perfect score shot in Outdoor Target Archery a new record will include the number of Inner 10s (X‘s) and will require at least one more X than an existing Record.

5.3 WORLD RECORDS

5.3.1 There will be world records

*5.3.1.1 for **Outdoor Target Archery** for Women, Men, Cadet Women, Cadet Men, Junior Women and Junior Men, Masters' Women and Masters' Men in the Recurve and Compound Divisions as applicable:*

- *Individual FITA Round (144 arrows);*
- *Individual 90 meters (36 arrows);*
- *Individual 70 meters (36 arrows);*
- *Individual 60 meters (36 arrows);*
- *Individual 50 meters for Cadet Women (36 arrows on a 122cm face);*
- *Individual 50 meters (36 arrows on a 80cm face);*
- *Individual 40 meters for Cadet Women (36 arrows);*
- *Individual 30 meters (36 arrows);*

World Records for the above distances may only be shot as part of the Individual FITA Round (144 arrows).

- *Individual FITA 70 meters Round (72 arrows);*
- *Individual FITA 60 meters Round for Cadets (72 arrows);*
- *Individual Olympic Round match (18 arrows);*
- *Individual Olympic Round for Cadets match (18 arrows);*
- *Individual Olympic Round match (12 arrows);*
- *Individual Olympic Round for Cadets match (12 arrows);*
- *Individual Olympic Round Finals total (36 arrows);*
- *Individual Olympic Round for Cadets Finals total (36 arrows);*
- *Team FITA Round (3 X 144 arrows);*
- *Team FITA 70 meters Round (3 X 72 arrows);*
- *Team FITA 60 meters Round for Cadets (3 X 72 arrows);*
- *Olympic Round Team match (27 arrows);*
- *Olympic Round Team for Cadets match (27 arrows);*
- *Olympic Round Team Finals total (2 X 27 arrows).*
- *Olympic Round Team for Cadets Finals total (2 X 27 arrows).*

*5.3.1.2 For **Indoor Target Archery** for Women, Men, Cadet Women and Cadet Men, Junior Women and Junior Men, Masters' Women and Masters' Men in the Recurve and Compound Divisions:*

- *Individual 25 meters (60 arrows on 60cm faces or 60cm triple faces);*
- *Individual 18 meters (60 arrows on 40cm faces or 40cm triple faces);*

- *Individual Indoor Match Round match (18 arrows);*
- *Individual Indoor Match Round match (12 arrows);*
- *Individual Indoor Match Round Finals total (36 arrows);*
- *Indoor Match Round Team match (27 arrows);*
- *Indoor Match Round Team Finals total (2 X 27 arrows).*

*5.3.1.3 For **Flight Shooting** for Women, Men, Junior Women and Junior Men for the FITA Events listed in article 11.6.4.*

5.4 WORLD RECORD TOURNAMENTS

5.4.1 The following tournaments are considered automatically as World Record Tournaments:

- Olympic Games;
- World Championships;
- World Ranking Tournaments.

All other tournaments are not automatically considered as World Record tournaments and need to comply with all the requirements as specified in articles 4.8.2 and 5.5.1.1.

5.4.2 All tournaments for the disciplines of Outdoor and Indoor Target Archery complying with article 6.4 will also be valid for recognition of World Records as defined in article 5.2.

5.4.3 Team World Records may be established at a tournament at which there is competition between at least 1 team from three different countries. Each team will be made up of three women or three men.

5.4.4 World Records can be established in a single Outdoor FITA Round, Double Outdoor FITA Round, FITA 70 Meter Round, FITA 60m Round for Cadets, an Olympic Round or an Olympic Round for Cadets (60m), in the Indoor Rounds and in Flight Shooting as set forth in article 5.3.

5.5 CONFIRMATION OF WORLD RECORDS

5.5.1 World Records shot at Olympic Games, World Championships and World Ranking Events are confirmed automatically as soon as the scores at the tournament are official. Records shot at other tournaments complying with articles 4.8.2 or 6.4.6 are subject to confirmation by the Secretary General.

5.5.1.1 Scores shot at other tournaments must be sent to the Secretary General no later than ten (10) days after the tournament.

Anyone can claim a record, which must be accompanied by the declaration of the Member Association under the control of which the tournament was organized, including:

- *The name, description, place and date of the tournament;*
- *Confirmation that the tournament was shot under FITA Rules;*
- *Confirmation that an athlete, in respect of whose score records are being claimed, was a member of a Member Association at the time;*
- *Name, nationality and category of the athlete;*
- *A complete results list;*
- *Details of the record claimed, and supported by the original scorecard or a properly witnessed copy.*

5.5.1.2 *The Secretary General will ratify a claim for a World Record immediately upon its receipt.*

5.5.1.3 *Should a World Record be broken by two or more equal scores made on the same day, the athletes will be declared Joint World Record Holders.*

5.5.1.4 *World Record Holders will be presented with a Diploma stating the result and the place of the record.*

5.6 OLYMPIC RECORDS

5.6.1 There will be Olympic Records:

5.6.1.1 *Individual: Women and Men:*

- *FITA 70 Meters Round (72 arrows);*
- *Olympic Round match (18 arrows);*
- *Olympic Round match (12 arrows);*
- *Olympic Round Eliminations total (36 arrows 1/16 and 1/8 Eliminations);*
- *Olympic Round Finals total (36 arrows).*

5.6.1.2 *Teams: Women and Men:*

- *FITA 70 Meters Round (3 x 72 arrows);*
- *Olympic Round Team match (27 arrows);*
- *Olympic Round Finals total (2 x 27 arrows).*

5.7 CONFIRMATION OF OLYMPIC RECORDS

5.7.1 Olympic Records are confirmed automatically as soon as the scores are official.

5.8 PUBLICATION OF RECORDS

5.8.1 Records for women and men will be kept separately.

5.8.1.1. Details of new records will be circulated by the Secretary General to all Member Associations and Members of Council.

CHAPTER 6

MEDALS, TROPHIES AND PERFORMANCE AWARDS

6.1 MEDALS

6.1.1 FITA Championship medals shall be awarded to the first, second and third place in each event of the Championships.

6.1.1.1 In the outdoor target team event all 4 members of a team, who have been on the field during any phase of the elimination and finals round shall receive medals.

6.1.1.2 The medal shall bear on the face the emblem of FITA and on the reverse the name of the Championship, the venue, the year, the indication of the placing of its winner (e.g., woman champion or second men's team) and, when necessary that of the event for which it is awarded (e.g., Barebow Man Champion or Recurve third woman or second junior man).

6.1.1.3 The medals for World Championships shall be surrounded by a wreath.

6.1.1.4 The medals shall have a diameter of 40mm.

6.1.1.5 The medal shall be suspended by a ribbon supplied by FITA, as wide as the diameter of the medal, one meter long sewn in the form of a loop so that it can be hung around the neck of the winner.

6.1.1.6 30mm above the medal, the ribbon shall be held by a bar brooch 42mm x 10mm for 40mm medals. Bar brooches shall be gold, silver or bronze to suit the medals.

6.1.1.7 All medals and bar brooches shall be supplied by the Executive Committee at least two months before the date of the Championship; the engraving of medals and the provision of the ribbons shall be supplied and paid for by FITA.

6.2 PRIZES AND TROPHIES

6.2.1 At FITA Championships in Target Archery, diplomas shall be awarded to the athletes placed 1st, 2nd, 3rd, 4th, 5th, 6th, 7thand 8th in each individual event.

6.2.1.1 Council may receive for FITA the donation of Challenge Trophies for FITA Championships. Such Challenge Trophies shall remain the property of FITA.

6.2.2 At FITA Championships prizes shall be awarded to the athletes placed first, second and third in the Qualification Round.

6.2.2.1 The Organizers may award other prizes at their discretion, to individual participants or to teams. These prizes may include medals to individual winners of distances and the first three winners of the Qualification Round.

6.3 FITA PERFORMANCE AWARDS

6.3.1 FITA can recognize as valid for the gaining of FITA's awards and the registration of World Records a certain number of tournaments organized by each Member Association as specified in article 6.4.

6.3.1.1 The awards shall be granted when the athlete achieves the relevant score for the first time in the appropriate event.

6.3.1.2 Only one award can be claimed for each score.

6.3.2 For the discipline of Outdoor Target Archery there will be FITA Stars in relation to the scores obtained in the FITA Round as follows:

6.3.2.1 ***Recurve*** *Division: The FITA Star on a shield:*

FITA STAR AWARD - Recurve						
	Star	*Star on Black*	*Star on Blue*	*Star on Red*	*Star on Gold*	*Star on Purple*
Men and Women	*1000 points*	*1100 points*	*1200 points*	*1300 points*	*1350 points*	*1400 points*

6.3.2.2 ***Compound*** *Division: The FITA Star on a circular background:*

FITA STAR AWARD - Compound						
	Star	*Star on Black*	*Star on Blue*	*Star on Red*	*Star on Gold*	*Star on Purple*
Men and Women	*1000 points*	*1100 points*	*1200 points*	*1300 points*	*1350 points*	*1400 points*

6.3.2.3 *Cadet Recurve and Compound divisions*
The FITA Cadet Star:

FITA CADET STAR AWARD – Recurve and Compound						
	Star	*Star on Black*	*Star on Blue*	*Star on Red*	*Star on Gold*	*Star on Purple*
Men and Women	*1000 points*	*1100 points*	*1200 points*	*1300 points*	*1350 points*	*1400 points*

6.3.3 For the discipline of Outdoor Target Archery (Standard Bow Division) there will be FITA standard Round Awards.

6.3.3.1 This will be an arrow in a circular badge superimposed with the words, 'FITA Standard Round Award:

FITA STANDARD ROUND AWARD					
	Arrow on White	*Arrow on Black*	*Arrow on Blue*	*Arrow on Red*	*Arrow on Gold*
Men	*500*	*530*	*560*	*590*	*620*
Women	*475*	*505*	*535*	*565*	*595*

6.3.3.2 In order to be eligible for a FITA Standard Round Award an athlete must not have achieved a FITA Star Award of 1000 points or higher, using any equipment.

6.3.4 For the discipline of Target Archery there will be FITA Target Awards:

6.3.4.1 These badges will be on a circular collared background and awarded for the scores set out in the chart below and for the following Rounds:

- *FITA 70m Round (72 arrows);*
- *Half FITA Round (72 arrows);*
- *FITA 900 Round (90 arrows);*
- *25 meter FITA Indoor Round (60 arrows);*
- *18 meter FITA Indoor Round (60 arrows);*

FITA TARGET AWARD - Recurve + Compound (all classes male and female)						
Target	*on White*	*on Black*	*on Blue*	*on Red*	*on Gold*	*on Purple*
FITA 70m	*500*	*550*	*600*	*650*	*675*	*700*
Half FITA	*500*	*550*	*600*	*650*	*675*	*700*
900 Round	*750*	*800*	*830*	*860*	*875*	*890*
25m Indoor	*500*	*525*	*550*	*575*	*585*	*595*
18m Indoor	*500*	*525*	*550*	*575*	*585*	*595*

6.3.4.2 There will be FITA Cadet Target Awards for:

- *FITA 60m Round for Cadets (72 arrows)*

FITA CADET TARGET AWARD - Recurve + Compound (male and female)						
Target	*on White*	*on Black*	*on Blue*	*on Red*	*on Gold*	*on Purple*
FITA 60m	*500*	*550*	*600*	*650*	*675*	*700*

6.3.4.3 Only one badge in each colour may be claimed, regardless of the round shot.

6.3.5 For the discipline of Field Archery there will be Arrowhead Badges:

*6.3.5.1 These badges will be awarded for the **Barebow and Recurve** Divisions as follows:*

FITA ARROWHEAD BADGES – Barebow - Recurve														
	24 targets		*28 targets*		*32 targets*		*36 targets*		*40 targets*		*44 targets*		*48 targets*	
	men	*women*	*men*	*women*	*men*	*women*	*men*	*women*	*men*	*women*	*men*	*women*	*men*	*women*
Green	*198*	*193*	*231*	*226*	*264*	*258*	*297*	*290*	*330*	*322*	*363*	*354*	*396*	*386*
Brown	*228*	*211*	*266*	*247*	*304*	*282*	*342*	*317*	*380*	*352*	*418*	*387*	*456*	*422*
Grey	*258*	*241*	*301*	*282*	*344*	*322*	*387*	*362*	*430*	*402*	*473*	*442*	*516*	*482*
Black	*288*	*271*	*336*	*317*	*384*	*362*	*432*	*407*	*480*	*452*	*528*	*497*	*576*	*542*
White	*318*	*301*	*371*	*352*	*424*	*402*	*477*	*452*	*530*	*502*	*583*	*552*	*636*	*602*
Silver	*330*	*313*	*385*	*367*	*440*	*418*	*495*	*470*	*550*	*522*	*605*	*574*	*660*	*626*
Gold	*340*	*324*	*396*	*378*	*452*	*432*	*509*	*486*	*566*	*540*	*623*	*594*	*680*	*648*

*6.3.5.2 These badges will be awarded for the **Compound** division as follows:*

FITA ARROWHEAD BADGES – Compound														
	24 targets		*28 targets*		*32 targets*		*36 targets*		*40 targets*		*44 targets*		*48 targets*	
	men	*women*	*men*	*women*	*men*	*women*	*men*	*women*	*men*	*women*	*men*	*women*	*men*	*women*
Green	*206*	*197*	*241*	*229*	*276*	*262*	*310*	*295*	*344*	*328*	*378*	*361*	*412*	*394*
Brown	*238*	*226*	*277*	*263*	*316*	*300*	*356*	*338*	*396*	*376*	*436*	*414*	*476*	*452*
Grey	*269*	*256*	*313*	*298*	*358*	*340*	*404*	*383*	*448*	*426*	*493*	*469*	*538*	*512*
Black	*300*	*286*	*350*	*333*	*400*	*380*	*450*	*428*	*500*	*476*	*550*	*524*	*600*	*572*
White	*331*	*316*	*387*	*368*	*442*	*420*	*497*	*473*	*552*	*526*	*607*	*579*	*662*	*632*
Silver	*344*	*328*	*402*	*382*	*460*	*436*	*517*	*491*	*574*	*546*	*631*	*601*	*688*	*656*
Gold	*354*	*337*	*413*	*394*	*472*	*450*	*531*	*506*	*590*	*562*	*649*	*618*	*708*	*674*

6.3.5.3 The FITA Arrowhead Round consists of any number of targets between 24-48 targets which is divisible by four (4), that is, two complete FITA Field Rounds, with distances as set forth in articles 4.5.3.7 and 4.5.3.8 which may be shot on marked and unmarked courses or one of each.

6.3.5.4 If a two-day-competition consists of two Arrowhead Rounds, the athlete may gain two Arrowhead Awards.

6.4 EVENTS FOR FITA PERFORMANCE AWARDS

6.4.1 The FITA Star Awards can be gained on the scores obtained in a Single FITA Round, in either FITA Round of a Double FITA Round, or in the Qualification Round for the Olympic Round, when organized in accordance with article 6.5.

6.4.2 The FITA Standard Round Awards can be gained on the scores obtained in a FITA Standard Round. This can be held concurrently with the shooting of the 50 and 30 meters distances of a full FITA Round.

6.4.3 The FITA Target Award can be gained on scores achieved in one of the rounds mentioned in article 6.3.4.

6.4.4 The FITA Arrowhead Badge can be gained on the total score obtained in an Arrowhead Round, as specified in the articles 6.3.5.3; 6.3.5.4 and 4.5.3.

6.4.5 The awards, defined in article 6.3, can be gained at Tournaments organized by Member Associations and recognized by FITA for which each Member Association will pay a fee established by Council within the maximum amount established by Congress.

6.4.6 A Member Association intending to organize such a tournament must fulfil the following requirements:

6.4.6.1 Mail the announcement to the Secretary General at least one month before the first day of shooting (see article 4.8.2.2).

6.4.6.2 Mail the announcement to other Member Associations, if the tournament is international, at least sixty (60) days before.

6.4.6.3 Provide a Director of Shooting and Judges to the number of one for every ten targets and, in the case of international Tournaments, a Jury of Appeal of three members; all Judges must be approved by their Member Association or by FITA.

6.4.6.4 Mail within one month of the tournament to each Member Association whose athletes have competed, at least one copy of the complete results list.

6.5 APPLICATIONS FOR AWARDS

6.5.1 Supplies of the following awards will be sent annually to Member Associations in the numbers requested.

6.5.1.1 FITA Star awards and FITA Cadet Star Awards for 1000, 1100, 1200 (both divisions); 1300 (compound).

6.5.1.2 FITA Target awards on white, black, blue and red background;

6.5.1.3 FITA Arrow badges on white, black and blue background.

6.5.1.4 FITA Arrowheads on a green, brown, grey, black and white background.

6.5.2 The Member Associations shall be responsible for:

6.5.2.1 Requesting yearly from the Secretary General and holding in stock a sufficient number of such awards.

6.5.2.2 Paying for such awards the price of which has been approved by Council.

6.5.2.3 Noting the name or description, place and date of the tournament.

6.5.2.4 Controlling that the tournament was shot according to FITA Shooting Rules.

6.5.2.5 Controlling that all athletes whose applications are submitted were affiliated to a Member Association at the time of the tournament.

6.5.2.6 Controlling the correctness of the original scorecards or a properly witnessed copy that shall accompany each application.

6.5.3 Applications for the higher awards must be sent to the Secretary General on behalf of the applicants by their Member Associations.

6.5.3.1 Applications must:

- *Indicate the name and class of the applicants;*
- *Indicate the names, places and dates of the Tournaments;*
- *Provide a statement of compliance with bylaws 6.5.2.4, 6.5.2.5, and 6.5.2.6,*
- *Be accompanied by the original scorecard or a properly witnessed copy and a complete results list.*

6.5.3.2 The Secretary General, if satisfied with the documentation received, shall forward the badges through the Member Association charging the fee established by Council and shall publish periodically nominal lists of the badges awarded.

APPENDIX 1

STANDING ORDERS - CONGRESS PROCEDURES

1 CONSTITUTIONAL RULES

1.1 Congress will take place as set out in article 1.6 of the Constitution and the length of time it takes will depend on the complexity of the agenda.

1.2 The Standing Orders are for the guidance and assistance of the organizers and delegates to Congress.

1.3 The Standing Orders may, under special circumstances, be suspended. Any suspension will require a motion proposing it and the reasons for the motion will need to be provided. The motion will need to be passed with a 2/3 majority. The Constitutional article 1.6 cannot under any circumstance be included in any such motion.

2 CONGRESS VENUE

2.1 The Congress venue is the responsibility of the organizers. Arrangements will be made in cooperation with and the approval of the FITA Executive Committee.

2.1.1 The Congress hall must be large enough to accommodate seating facilities for the Council (maximum 14 members) at the main table, preferably on raised platform. The delegates should be seated in a semicircle or horseshoe shape with the delegates on the outside of the tables only. If the hall is not large enough to permit that type of seating arrangement, then delegates will be seated at tables in rows (classroom like). Nameplates will be placed on the tables for Council. Member Associations will have a plate with the name of their country in English or French using the accepted three-letter abbreviation of each country. The countries are placed in alphabetical order clockwise, starting on the left as seen from the platform. Permanent Committees will be grouped together unless members are also representing a Member Association in which case this seating position will take preference. (For numbers in attendance, see Clause 3).

2.1.2 Technical facilities will be provided in the hall. They include simultaneous translation equipment for English and French, earphones for all delegates, a number of microphones (to be determined in con-

sultation with the Executive Committee), and tape-recording facilities. Should any other equipment be necessary the Executive Committee will advise the organizers as soon as possible.

2.1.3 *The FITA Flag will be displayed, preferably on the wall behind the Council. The special emblem for the occasion (World Championship) may be placed in front of the platform or on the sidewalls.*

2.1.4 *A FITA office will be provided in consultation with the Executive Committee. There will be the normal facilities made available for the Secretariat including computer and photocopying facilities for preparing the Congress Minutes and other communications that may be required through the FITA office.*

2.1.5 *The Organizing Committee will be responsible for providing translators for English-French and typist(s) for English and French.*

2.1.6 *Arrangements will be made for luncheons for delegates and others attending Congress on the two days.*

2.1.7 *The Organizing Committee will ensure that there are sufficient rooms for the small group meetings to discuss the Goals of FITA. These "small rooms" may include arranging furniture in the main hall so that there is appropriate space for small groups to meet.*

3 ATTENDANCE

3.1 Congress is made up of various groups of persons:

3.1.1 FITA Council.

3.1.2 Member Associations with up to three representatives, Continental Associations with up to two representatives, Associate International Federations with two representatives and Associate Members with one representative each.

3.1.2.1 *Delegates may have an interpreter, if necessary, who carries out no other duties, and is in addition to the maximum number of delegates allowed.*

3.1.3 Member Associations may nominate a proxy provided that proxy is a Member in good standing.

3.1.4 FITA Permanent Committee members.

3.1.5 FITA Honorary President(s) and Vice-President(s), if any, are always welcome in Congress.

3.1.5.1 *Guest speaker(s) may be invited to address the Congress.*

3.1.5.2 *Technical personnel and stewards shall be appointed by the Organizing Committee in liaison with the FITA Executive Committee.*

3.1.5.3 Photographers and reporters from the press and television may enter at the beginning of a meeting. The Secretary General will tell them when they must leave the hall.

3.1.5.4 FITA Officers and all delegates present in Congress must sign an attendance register at the table set up for this purpose with two stewards in charge.

3.1.6 Only Members in good standing may attend Congress. 'In good standing' means having paid their membership fees up to and including that of the current year, and any other invoices in the deadlines established by Council.

4 CONGRESS DOCUMENTS

4.1 The FITA Executive Committee is responsible for providing the following Congress documents:

4.1.1 Agendas, Motions, Reports, Interpretations, current FITA Goals and the Minutes shall be issued in advance according to the Constitution;

4.1.2 Committee Reports according to their respective terms of reference. Additional Reports may be presented in Congress only by prior arrangement with the Executive Committee;

4.1.3 Lists of candidates, including their curriculum vitae, nominated by Member Associations for the elections scheduled for that Congress;

4.1.4 Ballot papers;

4.1.5 Any other documents that may be specially called for.

4.1.6 Attendance Register prepared for Signatures;

4.1.7 The Secretary General will prepare and issue to Member Associations in advance of Congress and at Congress special forms for nominations.

5 THE AGENDA

5.1 The purpose of the Agenda is to ensure the business of Congress is dealt with in proper order and that no item of importance is omitted, as well as giving the delegates advance information of what is to be placed before the Congress.

5.2 The order of the items on the Agenda is arranged at the discretion of the President and the Secretary General. The following items are usually placed on the Agenda in the following order:

5.2.1 *Opening of the Congress;*

5.2.2 *Report of Registration;*

5.2.3 *Apologies for absence;*

5.2.4 *The President's Opening Remarks;*

5.2.5 *Small group discussions on FITA Goals;*

- *These small groups will be arranged by the Secretary General and advised to delegates on registration.*
- *Each group will have a person to chair the group and another person to take notes of any recommendations to change the Goals. These people will be appointed by the President.*
- *The recommendations will be collated by the FITA office staff, with other assistance as necessary, and circulated to Council members and delegates as soon as possible.*

5.2.6 *Nomination of scrutineers;*

5.2.7 *Confirmation of the Minutes;*

5.2.8 *Matters arising from the Minutes;*

5.2.9 *The President's Report;*

5.2.10 *Decision on proposed sanctions of the Board of Justice (C&R Book 1 article 1.15.6;*

5.2.11 *The Treasurer's Report and Financial Statement;*

5.2.12 *Motions and amendments;*

5.2.13 *Proposals and amendments to proposals;*

5.2.14 *Committee Reports and Interpretations;*

5.2.15 *Presentation of the recommendations of the discussion groups on FITA Goals for Congress's guidance and consideration by Council;*

5.2.16 *Elections of officers;*

5.2.17 *Elections of Committees;*

5.2.18 *Allocation of Championships;*

5.2.19 *Any Other Business; including questions arising from Congress matters not covered by the Agenda that delegates may request permission to raise. These should be in writing and handed to the Secretary General before Congress;*

5.2.20 *Vote of Thanks;*

5.2.21 *Closure of the Congress.*

5.3 Items on the Agenda should generally be taken in the order they are listed, except that at the discretion of the President proposals to vary the order may be allowed provided the reasons that may make this desirable are clearly explained.

5.4 A date for Congress decisions to come into effect must be agreed by Congress and allow sufficient time for all Member Associations to be officially advised before that date.

6 RULES OF PROCEDURE AT CONGRESS IN SESSION

6.1 The President

The President is the senior officer of FITA and as such the President's dignity and precedence should always be upheld and respected by everyone in Congress. When the President rises to speak, delegates shall take their seats.

Matters arising from different understandings of the order and procedure at Congress shall be clarified by C&R and voted on by Congress. In respect of matters of order and procedure not covered in the Constitution and Rules or these Standing Orders the President's ruling shall be final.

6.2 The Delegates

All delegates in Congress have the right to speak.

6.2.1 *A delegate must signify his/her wish to speak ("take the floor") by holding up one hand;*

6.2.2 *Should several delegates request to speak at the same time, the President will call them one by one in the order each "catches the President's eye" - or by listing the delegates and calling out the order. If it's a controversial subject it may be necessary to call "those for" and "those against" alternately in fairly equal numbers. Such arrangements are at the President's discretion.*

6.2.3 *A delegate, when speaking, should usually rise in his/her place or walk to a rostrum if such is provide. Each speaker must always address the President ("the Chair").*

6.2.4 *Every speaker must start by giving his/her name followed by the Member Association or Continental Association represented or by indicating the status as Vice President, Council or Committee member. This is required to identify to Congress and on the tape recordings who is speaking.*

6.2.5 *A delegate when speaking will not be interrupted except by another delegate rising to a "point of order" or by the President.*

6.2.6 *A delegate when speaking must keep to the subject under discussion.*

6.2.7 *For delegates voting, consult article 1.6 of the Constitution and Clause 6.6 of these Rules.*

6.2.8 *Going into Committee*

Congress may resolve to move into Committee for special matters. This is referred to as being "in Committee" or "in Camera". This allows for less formality and delegates are not restricted to one speech only. Discussions are not to be minuted and tape recording will be suspended. While "in Committee" a statement or proposal will be decided on the matter that was discussed which will be announced when Congress is resumed and will be minuted.

6.3 The Minutes

The Minutes of a previous Session of Congress having been circulated in advance will be taken "as read'. The adoption of the Congress Minutes is usually proposed by the Chairman. Discussion on the Minutes will be restricted to their accuracy. Any proposed correction in the Minutes must be carried by a majority of those delegates present at the previous Congress Session. The President will sign and date the adopted Minutes and initial any corrections.

6.4 Motions for laws (see article 1.6.12)

6.4.1 Motions are modifications, alterations or revisions of the Constitution and Rules submitted for consideration by Congress. Notices of Motion are presented according to the Constitution. Motions usually state the new wording to be used or express a clear concept. Motions must be positive.

6.4.1.1 When compiling the agenda, motions are arranged in proper sequence according to part of the Constitution and Rules they seek to change.

6.4.1.2 The delegate presenting the motion is invited to speak first. The motion is then open for discussion.

6.4.1.3 Delegates are requested to speak once only on the same motion, but may at the President's discretion be allowed to speak again;

6.4.1.4 The President may during the discussion turn to a speaker and request some additional information or explanation.

6.4.1.5 The delegate who presented the motion will be given the opportunity to reply as the last speaker before the motion is put to a vote.

6.4.1.6 The President may propose a time limit for each speech according to prevailing circumstances.

6.4.1.7 Every delegate who wishes to speak should, if at all possible, be given the opportunity to do so.

6.4.1.8 Speakers should at all times refrain from repetition and must keep to the subject under discussion. Failure to do so may require the President to call the delegate to order, and, if repeated, may rule the delegate out of order and so prevent the speaker from continuing.

6.4.2 A motion may be withdrawn by the mover before it is presented to Congress. When a motion is before Congress it may be withdrawn only by consent of mover and supported by Congress.

6.4.3 A motion carried by Congress may not be repealed later at the same Congress.

6.4.4 An amendment to a motion is subject to the same general principles as the original motion and must be presented in accordance with articles 1.6.12 and 15. An amendment must be directly relevant to the original motion and must be positive. More than one amendment may be moved, but only one amendment shall be laid before the Congress at one time.

The order in which amendments will be discussed on the floor of Congress will be decided by the Secretary General.

6.4.4.1 The amendments will be placed in logical order based on the position of the original motion.

6.4.4.2 If it appears to the mover of an amendment that the order of its placement alters the intention, the mover may seek to have the order changed and Congress will determine whether to change it or not.

6.4.5 A delegate may move that "the question be put". If this is carried the mover of the original motion will be given the opportunity and right to reply. A vote is then to be taken immediately.

6.4.6 A delegate may move a motion to "lie on the table" and if carried, no further discussion will take place at that Congress.

6.4.7 A motion or amendment may, at the discretion of the President and with the approval of Congress, be divided into separate parts, provided the intention and meaning of the motion remains unchanged. A vote on each separate part will then take place.

6.4.8 A motion or an amendment to a motion, to change Chapter 1 and Chapters 4, 7, 8 and 9 require a two-thirds majority vote. Motions and amendments to change other chapters require a simple majority vote for adoption.

6.4.9 Motions and/or amendments that have been adopted by Congress come into effect on April 1 of the year following Congress unless a different date is specified.

6.5 Proposals for laws

6.5.1 A proposal does not involve amendments to the Constitution and Rules. Proposals express an opinion, a suggestion, an offer, a task, a plan or a request that is being laid before Congress for consideration.

6.5.1.1 Proposals are placed on the Agenda as appropriate to their reference to the Laws and Bylaws.

6.5.1.2 Amendments to proposals may be proposed and dealt with in the same way as motions.

6.5.2 Proposals require a simple majority vote for adoption.

6.6 Procedure for Motions and Proposals for Bylaws

6.6.1 Motions on Bylaws or changes in Bylaws, including their deletions, may be submitted to the Secretary General by Member Associations, Continental Associations, the President, Council, or the Permanent Committees from within their respective terms of reference.

6.6.1.1 The Secretary General will refer all motions for Bylaws to the relevant Permanent Committees for review and recommendation.

6.6.1.2 The Permanent Committees will submit their responses to the Secretary General within 45 days of receipt of the suggested Bylaws.

6.6.1.3 The Secretary General will distribute the motions for Bylaws with the committees' recommendations to the Constitution & Rules Committee to verify:

- *That the submitted motions to Bylaws are determined as Bylaws, and*
- *The Permanent Committee's recommendation is consistent with the existing FITA Laws & Bylaws*

6.6.1.4 The Constitution & Rules Committee will respond to the Secretary General, within 30 days of receipt of the report from the Permanent Committee, with its recommendations on the report's compliance with the conditions of 6.6.1.3 above.

6.6.2 Council decisions:

6.6.2.1 The Executive Committee will decide if it is necessary to put the suggested Bylaws to a postal vote or discuss and to vote on the suggested Bylaw at the next Council Meeting. If a mail vote is decided to be necessary, Council will make its decision using the majorities required by the FITA constitution within 14 days of receipt.

6.6.2.2 The Secretary General will publish the approved new Bylaw with its effective start date within 30 days of the Council's decision.

6.6.2.3 Where Council does not approve the suggested Bylaw, the Council will send its opinion to the original presenter.

6.6.3 Congress will confirm or reject the new Bylaws at its next session.

6.6.3.1 All Bylaws will be voted on by Congress en bloc except for those noted in 6.6.3.2 below.

6.6.3.2 Written requests to vote on a specific Bylaw in Congress may be submitted to the Secretary General by Member Associations, Continental Associations, the President or the Council. This request must be submitted at least 30 days prior to the publication of the final Congress papers.

6.6.3.3 Where Congress rejects a Council decision on a Bylaw, the original situation is reinstated.

6.7 Voting

6.7.1 There is no requirement for a delegate to vote, but failure to participate in voting is to be avoided wherever possible, as many delegates in Congress do not have the right to vote. Voting delegates carry the important responsibility given to them and, in accepting the position of delegate have, accepted this trust and privilege. Voting delegates are representatives of Member Associations and should be free to decide on the various subjects after having heard Congress discussions, therefore instructions that may be given by a Member Association should be guiding rather than binding.

6.7.1.1 When the discussion on a subject is ended, the President will state in full the wording of the matter before Congress on which a vote is about to be taken.

6.7.1.2 Mode of voting

Any decision may be voted upon by show of cards with the exception of:

- *Elected positions which are voted by secret ballot;*
- *Allocation of championships also by secret ballot;*
- *Any three voting delegates may request a secret ballot;*

Any Votes can be cast electronically.

6.7.2 The number of voting delegates (one for each Member Association) are counted and announced at the beginning of every Congress after the Secretary General has taken the roll call. Voting delegates are named separately on the attendance register.

6.7.3 Majorities:

- Motions require 50%+1 of the votes cast, an abstention is not counted as a vote cast;
- Motions on constitutional matters and shooting rules require 67% of the votes cast, an abstention is not counted as a vote cast;
- Elected positions require 50%+1 of the valid votes of the registered Member Associations at that Congress session (beginning of voting that day).

6.7.4 Procedure for Voting for FITA officers.

6.7.4.1 Number of votes:

- Each voting delegate has as many votes as there are positions to be filled;
- Voting delegates may only vote once for each position to be filled or two if a proxy vote is being cast;
- Ballots that have not been filled in correctly do not count.

6.7.4.2 First Round of voting:

- If there is only one position to be filled and if there is only one candidate the vote can be by acclamation;
- The candidate who achieves 50%+1 or more of the valid votes of the registered Member Associations at that Congress Session is elected;
- If there are more candidates than positions to be filled and not all positions to be filled reach the 50%+1 of the eligible votes of the registered Member Associations at that Congress Session, the procedure is as follows.

6.7.4.3 There will be a Second Round of voting:

- Those positions that have been filled and the candidate (candidates if tied) with the least number of votes will be withdrawn from the list. (If, in the case of a tie for the least number of votes, there will be an insufficient number of candidates left to fill the positions available, a vote will be held to break the tie. The candidate with the least number of votes in the tie break will then be withdrawn from the list);
- Each voting delegate will have as many votes as positions remain to be filled;
- The above procedure will be repeated until all positions have been filled or until none of the remaining positions have reached 50%+1. In that case Council will appoint an ad hoc member (not one of the unsuccessful nominees) to fill the position till the next Congress.

6.7.5 Elected officers will take up their positions at the closure of the Congress at which they were elected and remain in office until succeeded by their successors.

APPENDIX 2

FITA CODE OF ETHICS

The FITA Code of Ethics is based on the IOC Code of Ethics and aims to preserve the highest possible ethical values that govern FITA, its officers and the entire Archery family.

PREAMBLE

FITA and each of its officials and members, the candidate cities for the World Championships, the Organizing Committees of World and other Championships, the officers of Continental Associations and the National Member Associations concerned (known as "the FITA family") restate their commitment to the FITA Constitution and the Olympic Charter and, in particular, its fundamental principles. The FITA family affirms its loyalty to the Olympic ideal inspired by Pierre de Coubertin.

Consequently, within the organization of the World Championships, the Olympic games and other FITA recognized events, the FITA family undertakes to respect, and to ensure respect of the following rules:

1 Dignity

1. Safeguarding the dignity of the individual is a fundamental requirement of Olympism.
2. There will be no discrimination between participants on the basis of race, gender, ethnic origin, religion, philosophical or political opinion, marital status or other grounds.
3. No practice that leads to any form of physical or mental injury to the participants will be tolerated. All and any doping practices at all levels are strictly prohibited. The provisions against doping in the World Anti-Doping Code will be scrupulously observed.
4. All forms of harassment against participants, be it physical, mental, professional or sexual, are prohibited.
5. The FITA family will guarantee the athletes conditions of safety, well-being and medical care favourable to their physical and mental equilibrium.

2 Integrity

1. The FITA family or its representatives will not, directly or indirectly, solicit, accept or offer any concealed remuneration, commission, benefit or service of any nature

connected with the organization of the World Championships or their function as FITA official.

Any unsolicited commission, remuneration, benefit or service of any nature that is received by a FITA officer or staff member, needs to be declared in writing to the FITA office within 30 days of receipt when the total value is higher than 150 US$.

At the end of the year the Ethics Commission will review all of the declared cases and may decide that the beneficiary of such benefits may be FITA, or that the benefits must be returned to its origin.

2. Only gifts of nominal value (max of 150 US$), in accordance with prevailing local customs, may be given or accepted by members of the FITA family, as a mark of respect or friendship. Any other gift must be passed on to the organization of which the beneficiary is a member. If the beneficiary is member of several organizations, the Ethics Commission will decide on the final destination.

   Any gifts of a higher value than 150 US$ must be declared in writing to the FITA office and the Ethics Commission will decide on the final destination for the gift.

3. The hospitality shown to the members and staff of the FITA family, and the persons accompanying them, should not exceed the standards prevailing in the host country.

   Travel arrangements that are offered by organizers or national federations (except the one of which the officer is member), which are not foreseen in a co-operative agreement with the organizer or with the national federation and FITA must be declared to the Ethics Commission before the trip is taken. The Ethics Commission may suggest to the person to decline the invitation if this invitation is contrary to the ethics code.

4. The FITA family will avoid any conflict of interest between the organization to which they belong and any other organization within the Olympic Movement. If a conflict of interest arises, or if there is a danger of this happening, the parties concerned must inform the FITA Executive Committee, which will take appropriate measures.

5. The members of the FITA family will use due care and diligence in fulfilling their mission. They must not act in a manner likely to tarnish the reputation of the Archery and Olympic Movement.

6. The FITA family must not be involved with firms or persons whose activity is inconsistent with the principles set out in the Olympic Charter and the present Code.

7. The members of the FITA family will neither give, nor accept, instructions to vote or intervene in a given manner within the organs of FITA.

3 Resources

1. The resources of the FITA family may be used only for Archery and Olympic purposes.

2. The income and expenditure of the FITA family will be recorded in the accounts, which must be maintained in accordance with generally accepted accounting princi-

ples. These accounts will be checked by an independent auditor. They may be subjected to auditing by an expert designated by the FITA Executive Committee.

3. The FITA family recognizes the significant contribution that broadcasters, sponsors, partners and other supporters of sports events make to the development and prestige of the Olympic Games throughout the world.
4. However, such support must be in a form consistent with the rules of sport and the principles defined in the Olympic Charter and the present Code. They must not interfere in the running of sports institutions. The organization and staging of sports competitions is the exclusive responsibility of the independent sports organizations recognized by the IOC.

4 Candidatures

The members of the FITA family will, in all aspects, respect the FITA Constitution and the Manual for cities bidding to host the World Championships. Candidate cities will, inter alia, refrain from approaching another party, or a third authority, with a view to obtaining any financial or political support inconsistent with the provisions of the Manual.

5 Relation with States

1. The members of the FITA family will work to maintain harmonious relations with state authorities, in accordance with the principle of universality and of political neutrality of the World Championships. However, the spirit of humanism, fraternity and respect for individuals which inspires the Olympic ideal requires the governments of countries that are to host the Olympic Games to undertake that their countries will scrupulously respect the fundamental principles of the Olympic Charter and the present Code.
2. The members of the FITA family are free to play a role in the public life of the states to which they belong. They may not, however, engage in any activity or follow any ideology inconsistent with the principles and rules defined in the Olympic Charter or set out in the present Code.
3. The members of the FITA family will endeavour to protect the environment in any events they organize. In the context of the World Championships, they undertake to uphold generally accepted standards for environmental protection.

6 Confidentiality

The members of the FITA family will not disclose information entrusted to them in confidence. Disclosure of any information must not be for personal gain

or benefit, nor be undertaken maliciously to damage the reputation of any person or organization.

7 Implementation

1. The FITA family will see to it that the principles and rules of the Olympic Charter and the present Code are applied.
2. The members of the FITA family will notify the Ethics Commission of any breach of the present Code.
3. Each year, the Ethics Commission will submit to the FITA President and Executive Committee a report on the application of the present Code, noting any breaches of its rules. The Ethics Commission will propose to the FITA Council sanctions that might be taken against those responsible.
4. The Ethics Commission may set out the provisions for the implementation of the present Code in a set of bylaws.

8 Composition of the Ethics Commission

1. The Ethics Commission is composed of the Chairperson of the Board of Justice, the Secretary General, and one other member of the Board of Justice elected by the Board of Justice Members.

APPENDIX 3

PROCEDURE FOR THE BOARD OF JUSTICE

1 GENERAL PRINCIPLES

1.1 The Board of Justice has five (5) members with equal prerogatives and rights. The Chairperson has the task of organizing the work of the Board of Justice.

1.2 All Board of Justice Members must reply to the Board of Justice correspondence within ten (10) days of its receipt. The Chairperson will establish at the beginning of his or her term a reasonable delay for all correspondence after which a communication will be considered not answered. All Board of Justice Members are to send a copy of their correspondence on the case to all other members.

1.3 If an action is initiated by a Member Association or a person belonging to the Member Association to which a Board of Justice member also belongs, the Board of Justice member will abstain from all proceedings on the matter.

1.4 If an action is initiated against a Member Association, or one of its members, to which a member of the Board of Justice belongs, the Board of Justice member will abstain from all proceedings on that matter.

1.5 The party responding to a charge has the right to speak last before any verdict is given.

1.6 A tie vote will be decided by the vote of the chairperson.

2 INITIATION OF ACTION

2.1 Any Member Association or person entitled to do so by article 1.14.4 may initiate a complaint through the Secretary General. The complaint must include:

- Identification of the initiating party; name of Member Association, or the name of the person representing the Member Association, his/her name and function in the Member Association and the address for the correspondence.
- A clear statement of the allegations indicating the article(s) of FITA Constitution and Rules in question.
- Evidence of original documents or properly certified copies.
- Indication of the material to be provided by and clear identification of witnesses.

Any action must be initiated within one year of the decision being made or the incident occurring against which the complaint is laid.

2.2 The Secretary General will circulate to all Members of the Board of Justice any allegations presented to him in accordance with Article 1.14.4 and 1.14.7 including all evidence submitted.

2.3 The Secretary General will inform the person or Member Association against whom the allegation(s) are made of the allegation(s) brought against them. The Secretary General will transmit all evidence in his possession to the party complained against and request a statement in response including supporting evidence.

2.4 The responding party may submit to the Chairperson of the Board of Justice, with a copy to the Secretary General, a statement supported by evidence for consideration of the Board of Justice within thirty (30) days of receiving the allegations. A lack of a response is not to be held against the responding party. A communication that no statement has been submitted within the specified term will be circulated to all members of the Board of Justice.

3 EXAMINATION OF THE ACTION

3.1 Members of the Board of Justice must advise the Chairperson whether they consider the evidence submitted by both parties sufficient to judge the allegations(s) or whether more evidence is required. They should also indicate which, if any, witnesses they wish to hear.

3.2 If there is a majority decision that sufficient evidence is available the action will proceed.

3.3 If there is no such majority, the Chairperson of the Board of Justice will request all the extra evidence required by members. This evidence will be circulated to all members of the Board of Justice and to the responding party.

3.4 Either the party subject to the complaint or the one laying the complaint may request the Board of Justice to issue an order that the other party produces documents in its custody or under its control. The party seeking the production must demonstrate that the documents are likely to exist and are relevant.

3.5 The responding party may submit a further statement to the Chairperson of the Board of Justice. This further statement must be circulated to all members of the Board of Justice as in article 2.4 above.

4 JUDGMENT

4.1 Members of the Board of Justice will write to the Chairperson stating whether they consider the allegation(s) proved or not proved. If an allegation is considered proved, the member of the Board of Justice will specify the reason for his or her judgment and indicate the sanctions recommended. Should there be more than one allegation, the statements will be specific for each allegation.

4.2 The Chairperson will notify the Secretary General of the results of the investigation and the possible recommendations for sanctions.

4.3 The Secretary General will put the action on the Agenda of Council or Congress, as applicable.

APPENDIX 4

PROCEDURE FOR THE FITA JUDGE COMMITTEE

1 FITA JUDGES

1.1 FITA **International Judges (IJ)** are active judges, of whom is requested an adequate knowledge of at least one of the official language of FITA, appointed according to art. 2 and fulfilling the requirements listed in art. 3.1 of this appendix.

1.1.1 No Member Association may have more than five International Judges (including Judge Candidates).

1.1.2 International Judges will be given a photo-identification card for use at all competitions where they are appointed. All FIT Judges are entitled to wear the FITA Judge Badges.

1.1.3 The period of accreditation for International Judges is normally from one Outdoor World Championships to the next Outdoor World Championships.

1.1.4 The FITA Judge Committee will be responsible for the renewal of International Judges' accreditation. After the initial accreditation, all Judges' activity will be reviewed and they will be considered for re-accreditation at each Outdoor World Championship.

1.1.5 At least twice a year, a complete and updated list of all Judges, including their addresses and current accreditation status will be circulated by FITA to all Judges, Judge Candidates, Member Associations and FITA Officers.

1.1.6 The Judge Committee will be responsible for regularly training and updating International Judges.

1.1.7 Members of the FITA Judge Committee, or their delegates, will be allowed on the shooting fields and courses of all the FITA sanctioned events as observers in order to study judging procedures and FITA Judges' performances. These duties will be carried out in co-operation with the Chairperson of the Tournament Judge Commission, the DOS, the FITA Technical Delegate and the Chairperson of the Organizing Committee.

1.2 FITA recognises also the following permanent honorific titles:

- Judge Emeritus (JE)
- Honorary Judge (HJ)
- Judge Committee Award for Judges (JCA)

The procedures for awarding them are specified in article 5 of the present Appendix.

2 FIRST ACCREDITATION

2.1 Applications

2.1.1 Applications for International Judge must be submitted to FITA on behalf of the applicants by their Member Associations. Member Associations may obtain application forms from the FITA Office.

2.2.1.1 Applications must indicate:

- *Name of the Member Association;*
- *Name, gender, age and address of applicant;*
- *Experience, in particular, practical and technical experience in archery and possible experience in judging in other sports;*
- *Experience at FITA Championships or Major Continental or National Tournaments;*
- *Attendance at courses held by the FITA Judge Committee or Continental Associations;*
- *Languages spoken;*
- *Any additional information that could assist the FITA Judge Committee in evaluating the aptitude of the applicant.*

2.1.2 Member Associations may only recommend to the Judge Committee for International Judge examination experienced National Judges

2.1.2.1 These National Judges must have served for a minimum of two years;

2.1.2.2 Proposed candidates and their associations will regularly be advised of the Judge qualification seminars that will be organised by FITA.

2.2 Examinations

2.2.1 The FITA Judge Committee will arrange on a regular basis seminars for nationally recommended applicants to be examined for International Judge status.

Member Associations may request these seminars, and these requests will be coordinated by their Continental Associations.

The seminars will be run in one of FITA's official languages.

2.2.1.1 The invitation to each seminar will include specification of the language in which the seminar will be conducted.;

2.2.1.2 .A written examination will be given to all eligible applicants at the completion of the seminar;

2.2.1.3 The evaluation of the applicants will be based on the quality of their oral contribution to the seminar, and on the written examination;

2.2.1.4 The FITA Judge Committee will notify all officially registered applicants the results through their Member Associations.

2.2.2 The examination board will be present for the entire seminar and will be formed by two members of the FITA Judge Committee. Failing the availability of two mem-

bers of the Judge Committee, one of them could be replaced by the Continental Liaison officer or by a member of the Constitution and Rules Committee, the Target Archery Committee or the Field Archery Committee. The Judge Committee will be responsible for such appointment.

2.2.3 Applicants passing the seminar examination will remain Judge Candidates for at least two years and until they have successfully served at International events recognised by FITA and where International Judges are in control.

2.2.3.1 At each such event the Judge Committee will assign the Candidate to a senior re-accredited International Judge who will be required to submit a report to the committee on the Candidate's knowledge, ability and attention to the rules and procedures of FITA.

2.3 Delayed accreditation

2.3.1 National Judges passing the seminar examination who did not apply for the International Judges status, or who cannot obtain it because the limitations of article 1.1.1, may obtain their first accreditation as International Judge Candidate if they apply within two years.

3 RE-ACCREDITATION

3.1 Re-appointment at the end of an accreditation period depends on fulfilling the following requirements:

3.1.1 Regularly responding to the mandatory re-training questions (case studies) contained in each issue of the official Judge Committee Newsletter.

3.1.2 Regularly responding to all official requests for Judge duty application.

3.1.3 Making themselves available for at least one Judge duty every two years.

3.1.4 Completing and returning, within the deadline announced, the "Judge re-accreditation" application sent by the FITA office to all International Judges (and Candidates) at least 60 days before Congress.

3.1.5 Responding, within the deadline announced, with good quality replies to a re-accreditation test sent by Judge Committee to all International Judges in the second year of the accreditation period.

3.1.6 Failing to comply with the requirements specified in articles 3.1.1 – 3.1.3 will require the Judge Committee to take action:

- *To place the Judge on the "inactive list";*
- *Require the Chairperson of the Judge Committee to send a "warning of inactivity" to the Judge concerned (with a copy to*

his/her MA, the Continental Liaison officer of the Judge Committee and the FITA Secretary General);

- *Asking the reasons for his/her inactivity;*
- *Asking for a declaration that he/she wants to go on working as a FITA International Judge;*
- *Asking if the Judge concerned wishes to resign from active judging.*

3.1.7 The FITA Judge Committee will review the case again after 90 days of the notification being sent, taking into consideration also the documentation received from the Judge concerned. If the Judge Committee confirms its previous decision, the Judge will be notified by the Chairperson of the Judge Committee that his/her name will be withdrawn from the International Judges list after the next Outdoor World Championship. Copies of this letter will be sent to his/her MA, the Continental Liaison officer and the FITA Secretary General.

3.2 Re-accreditation will be denied to International Judges who are determined as being inactive, do not apply for re-accreditation or do not pass the re-accreditation test.

3.3 An appeal against the denial of re-accreditation may be lodged with FITA Council.

3.3.1 The person or the Member Association concerned should direct this request through the Secretary General of FITA.

3.3.2 Upon request, the Judge Committee will supply to Council, activity records and reports for any Judge whom the committee places on the inactive list, or for whom the Judge Committee denies re-accredidation.

3.4 Judges who have retired or who have not been re-accredited because of inactivity may ask to be re-instated as International Judges (or Candidates, as applicable) following the procedure of article 2.1.1.

3.4.1 The Judge Committee will review the application and, depending on the period and the reasons for the inactivity, decide if the applicant must attend a training seminar and/or pass a re-accreditation test.

4 SPECIAL REQUIREMENTS

4.1 To be eligible to serve at the Olympic Games, or to be appointed as the chairperson of the Tournament Judge Commission at World Championships and at Games, an International Judge must fulfil the following requirements:

4.1.1 To have been accredited for at least 5 years;

4.1.2 To be no older than 65 years. In exceptional cases the Judge Committee may consider older judges;

4.1.3 To have served in FITA Championships, FITA recognised Games, FITA World Ranking Tournaments or other events of an

international standard acceptable to the Judges Committee, in the last two years;

4.1.4 *To have responded with high quality replies to the mandatory re-training questions (case studies) contained in each issue of the official Judge Committee Newsletter in the last two years;*

4.1.5 *To have received a high-level evaluation in the re-accredi-tation test;*

4.1.6 *To have received a high-quality evaluation by the chairperson of the Tournament Judge Commission or by the Observer in charge of the Championships or Games in the previous two years.*

5 HONORARY TITLES

5.1 Judge Emeritus

International Judges, who because of health or other reasons, no longer serve as FITA Judges, but whom the FITA Judge Committee wishes to honour for their exceptional contribution to Judging and the promotion and improvement of Judging, may be awarded with the Judge Emeritus status by the Judge Committee.

5.2 Honorary Judge

International Judges having served with honour for 15 years or more who, because of health or other reasons, are unable to comply with the requirements for re-accreditation may be awarded with the Honorary Judge status by the Judge Committee.

5.3 Judge Committee Awarded Judge

International Judges having served for 4 years or more will received the FITA Judge Committee Award after retirement or denial of accreditation. The award will not be given if the accreditation has been denied for failing the re-accreditation test.

6 CONTINENTAL JUDGES

6.1 All Continental Associations may train and approve Continental Judges.

6.1.1 *Continental Judges can serve at their tournaments that are valid for FITA Performance Awards and World Records.*

6.1.2 *Training and approval procedures will be held in conformity with the instructions of the FITA Judge Committee.*

6.1.3 *National Judges passing the FITA seminar examination and who cannot obtain the International Judge status (because of article*

1.1.1 or because of language limitations) are eligible to receive the Continental Judge status from their Continental Association.

6.1.4 Continental Judges are not listed in the FITA Judges database. The Continental Association may submit to FITA the list of their Continental Judges who require to receive periodical information concerning judge training and updating.

7 NATIONAL JUDGES

7.1 All Member Associations must train and approve National Judges.

7.1.1 National Judges can serve at the Member Associations tournaments that are valid for FITA Performance Awards and World Records.

7.1.2 Training and approval procedures for National Judges will be held in conformity with the instructions of the FITA Judge Committee.

APPENDIX 5 – Table of Contents

ANTI-DOPING RULES (new)

	TABLE OF CONTENTS	93
	INTRODUCTION	97
	Preface	97
	Fundamental Rationale for the Code and FITA's Anti-Doping Rules	97
	FITA's Anti-Doping History	98
	Scope	98
1	**DEFINITION OF DOPING**	99
2	**ANTI-DOPING RULE VIOLATIONS**	99
2.1	The presence of a Prohibited Substance - in an Athlete ...	99
2.2	Use or Attempted Use of a Prohibited Substance or Method	99
2.3	Refusing to submit to Sample collection	99
2.4	Violation of availability for Out-of-Competition Testing	99
2.5	Tampering of Doping Control	99
2.6	Possession of Prohibited Substances and Methods	99
2.7	Trafficking in any Prohibited Substance or Prohibited Method	100
2.8	Administration of a Prohibited Substance	100
3	**PROOF OF DOPING**	100
3.1	Burdens and Standards of Proof	100
3.2	Methods of Establishing Facts and Presumptions	100
4	**THE PROHIBITED LIST**	101
4.1	Incorporation of the Prohibited List	101
4.2	Prohibited Substances and Prohibited Methods	101
4.3	Criteria for Substances and Methods on the Prohibited List	101
4.4	Therapeutic Use	101
4.5	The Prohibited List	103
	PROHIBITED SUBSTANCES	103
S1.	*STIMULANTS*	
S2.	*NARCOTICS*	
S3.	*CANNABINOIDS*	
S4.	*ANABOLIC AGENTS*	
S5.	*PEPTIDE HORMONES*	
S6.	*BETA-2 AGONISTS*	
S7.	*AGENTS WITH ANTI-OESTROGENIC ACTIVITY*	
S8.	*MASKING AGENTS*	
S.9	*GLUCOCORTICOSTEROIDS*	
	PROHIBITED METHODS	107
M1.	*ENHANCEMENT OF OXYGEN TRANSFER*	
M2.	*PHARMACOLOGICAL, CHEMICAL AND PHYSICAL MANIPULATION*	
M3.	*GENE DOPING*	
	SUBSTANCES AND METHODS PROHIBITED IN- AND OUT-OF-COMPETITION	107

	PROHIBITED SUBSTANCES	107
S4.	*ANABOLIC AGENTS*	
S5.	*PEPTIDE HORMONES*	
S6.	*BETA-2 AGONISTS**	
S7.	*AGENTS WITH ANTI-OESTROGENIC ACTIVITY*	
S8.	*MASKING AGENTS*	
	PROHIBITED METHODS	108
M1.	*ENHANCEMENT OF OXYGEN TRANSFER*	
M2.	*PHARMACOLOGICAL, CHEMICAL AND PHYSICAL MANIPULATION*	
M3.	*GENE DOPING*	
	SUBSTANCES PROHIBITED IN PARTICULAR SPORTS	108
P.1	*ALCOHOL*	
P.2	*BETA-BLOCKERS*	
P.3	*DIURETICS*	
	SPECIFIED SUBSTANCES	109
	Stimulants	
	Cannabinoids	
	Inhaled Beta-2 Agonists.	
	Diuretics	
	Masking Agents	
	Beta Blockers	
	Alcohol	
	THE 2004 MONITORING PROGRAM	109
	Stimulants:	
	Narcotics:	
5	**TESTING**	110
5.1	Authority to Test	110
5.2	Responsibility for FITA Testing	110
5.3	Testing Standards	110
5.4	Coordination of Testing	111
5.5	Athlete Whereabouts Requirements	111
5.6	Retirement and Return to Competition	112
5.7	Selection of Athletes to be Tested	112
5.8	Independent Observers	113
6	**ANALYSIS OF SAMPLES**	114
6.1	Use of Approved Laboratories	114
6.2	Substances Subject to Detection	114
6.3	Research on Samples	114
6.4	Standards for Sample Analysis and Reporting	114
7	**RESULTS MANAGEMENT**	114
7.1	Results Management for Tests Initiated by FITA	114
7.2	Results Management for Tests - Other International Events	115
7.3	Results Management for Tests - by Member Associations	115
7.4	Provisional Suspensions	116
8	**RIGHT TO A FAIR HEARING**	116
8.1	Hearings arising out of FITA Testing or Tests at International Event, or Major Games for sanctioning beyond disqualification.	116
8.2	Hearings Arising Out of National Testing	117
8.3	Principles for a Fair Hearing	117

9	**AUTOMATIC DISQUALIFICATION OF INDIVIDUAL RESULTS .**	118
10	**SANCTIONS ON INDIVIDUALS**	118
10.1	Disqualification of Results - Anti-Doping Rule Violation	118
10.2	Imposition of Ineligibility for Prohibited Substances and Methods	118
10.3	Specified Substances	119
10.4	Ineligibility for Other Anti-Doping Rule Violations	119
10.5	Reduction of Period of Ineligibility - Exceptional Circumstances .	119
10.6	Rules for Certain Potential Multiple Violations	120
10.7	Disqualification of Results - Subsequent to Sample Collection	121
10.8	Commencement of Ineligibility Period	121
10.9	Status During Ineligibility	121
10.10	Reinstatement Testing	122
11	**CONSEQUENCES TO TEAMS**	122
12	**SANCTIONS AND COSTS ASSESSED AGAINST MAs**	122
13	**APPEALS**	123
13.1	Decisions Subject to Appeal	123
13.2	Appeals against decisions regarding Anti-Doping Rule violations ...	123
13.3	Appeals against decisions granting or denying a TUE	124
13.4	Appeals against decisions pursuant to Article 12	124
13.5	Time for Filing Appeals	124
14	**MEMBER ASSOCIATIONS AND FITA ANTI-DOPING RULES ...**	125
14.1	Incorporation of FITA Anti-Doping Rules	125
14.2	Statistical Reporting	125
14.3	Doping Control Information Clearing House	125
14.4	Public Disclosure	125
14.5	Recognition of Decisions by FITA and Member Associations	126
15	**RECOGNITION OF DECISIONS BY OTHER ORGANIZATIONS.**	126
16	**STATUTE OF LIMITATIONS**	126
17	**FITA'S COMPLIANCE REPORTS TO WADA**	127
18	**AMENDMENT - INTERPRETATION OF ANTI-DOPING RULES..**	127
19	**DEFINITIONS**	128
20	**FITA ANTI-DOPING AGREEMENT**	133
21	**DOPING CONTROL STATION**	134
22	**DOPING CONTROL INFORMATION**	135
23.1	**TUE (Standard)**	136
23.2	**TUE (Abbreviated)**	140
23.3	**TUE (Certificate of Approval)**	142
24.1	**DOPING CONTROL NOTIFICATION**	143
24.2	**DOPING CONTROL OFFICIAL RECORD**	143
25	**DOPING CONTROL TRANSPORT FORM**	145
26	**DOPING CONTROL ALCOHOL TEST FORM**	146

APPENDIX 5

ANTI-DOPING RULES (new)

(see Chapter 2 of Book1; article 2.3)
The following rules are subject to changes of the World Anti Doping Code, the lists published in the C&R Book are guidelines; please refer to the updated lists as approved by WADA (see: www.wada-ama.org → 'prohibited list')
Please refer to Article 19 of this Appendix for the **definition** of technical terms.

INTRODUCTION

Preface

At the 2003 FITA Congress held in New York, FITA adopted the World Anti-Doping Code (the "Code"). These Anti-Doping Rules are adopted and implemented in conformance with FITA's responsibilities under the *Code*, and are in furtherance of FITA's continuing efforts to eradicate doping in the sport of Archery.

Anti-Doping Rules, like Competition rules, are sport rules governing the conditions under which sport is played. Athletes accept these rules as a condition of participation. Anti-Doping Rules are not intended to be subject to or limited by the requirements and legal standards applicable to criminal proceedings or employment matters. The policies and minimum standards set forth in the Code and implemented in these Anti-Doping Rules represent the consensus of a broad spectrum of stakeholders with an interest in fair sport and should be respected by all courts and adjudicating bodies.

Fundamental Rationale for the Code and FITA's Anti-Doping Rules

Anti-doping programs seek to preserve what is intrinsically valuable about sport. This intrinsic value is often referred to as "the spirit of sport"; it is the essence of Olympism; it is how we play true. The spirit of sport is the celebration of the human spirit, body and mind, and is characterized by the following values:

- Ethics, fair play and honesty
- Health
- Excellence in performance
- Character and education
- Fun and joy
- Teamwork
- Dedication and commitment
- Respect for rules and laws

- Respect for self and other participants
- Courage
- Community and solidarity

Doping is fundamentally contrary to the spirit of sport.

FITA's Anti-Doping History

FITA actively has been fighting against doping since and has been always at the forefront. FITA has been one of the first to test for alcohol in a systematic way. FITA in 1998 introduced Out of Competition testing and in 1999 was the first IF to have WADA conduct its Out of Competition testing.

Scope

These Anti-Doping Rules shall apply to FITA, each Member Association and Continental Association of FITA, and each Participant involved in the activities of FITA or any of its affiliated Member Associations and Continental Associations, by virtue of the Participant's membership, accreditation, or participation in FITA, its Member Associations, Continental Associations, or their activities, International Events or Events.

For FITA, International Events are defined as:

- Competition for World and Continental titles,
- Competition for Olympic titles,
- Competition for World Ranking,
- Olympic Qualification Events (Continental Qualifying Tournaments),
- Archery events of Major Event Organizations,
- And any other Event for which FITA is the ruling body or appoints technical officials.

All athletes entering the FITA Registered Testing Pool and all athletes being eligible for participation in FITA World Championship Events must have personally signed the FITA Anti-Doping Agreement form in Article 20, in the actual form approved by the FITA Executive Committee. All forms from Minor applicants must be counter-signed by their legal guardians.

It is the responsibility of each Member Association to ensure that all national-level Testing on the Member Association’s Athletes complies with these Anti-Doping Rules. In some cases, the Member Association itself will be conducting the Doping Control described in these Anti-Doping Rules. In other countries, many of the Doping Control responsibilities of the Member Association have been delegated or assigned by statute to a National Anti-Doping Organization. In those countries, references in these Anti-Doping Rules to the Member Association shall apply, as applicable, to the Member Association's National Anti-Doping Organization.

These Anti-Doping Rules shall apply to all Doping Controls over which FITA and its Member Associations and Continental Associations have jurisdiction.

1 DEFINITION OF DOPING

Doping is defined as the occurrence of one or more of the anti-doping rule violations set forth in Article 2.1 through Article 2.8 of these Anti-Doping Rules.

2 ANTI-DOPING RULE VIOLATIONS

The following constitute anti-doping rule violations:

2.1 The presence of a Prohibited Substance or its Metabolites or Markers in an Athlete's bodily Specimen

2.1.1 It is each Athlete's personal duty to ensure that no Prohibited Substance enters his or her body. Athletes are responsible for any Prohibited Substance or its Metabolites or Markers found to be present in their bodily Specimens. Accordingly, it is not necessary that intent, fault, negligence or knowing Use on the Athlete's part be demonstrated in order to establish an anti-doping violation under Article 2.1.

2.1.2 Excepting those substances for which a quantitative reporting threshold is specifically identified in the Prohibited List, the detected presence of any quantity of a Prohibited Substance or its Metabolites or Markers in an Athlete's Sample shall constitute an anti-doping rule violation.

2.1.3 As an exception to the general rule of Article 2.1, the Prohibited List may establish special criteria for the evaluation of Prohibited Substances that can also be produced endogenously.

2.2 Use or Attempted Use of a Prohibited Substance or a Prohibited Method

The success or failure of the Use of a Prohibited Substance or Prohibited Method is not material. It is sufficient that the Prohibited Substance or Prohibited Method was Used or Attempted to be Used for an anti-doping rule violation to be committed.

2.3 Refusing to submit to Sample collection

Refusing or failing without compelling justification, to submit to Sample collection after notification as authorized in these Anti-Doping Rules or otherwise evading Sample collection.

2.4 Violation of availability for Out-of-Competition Testing

Violation of the requirements regarding Athlete availability for Out-of-Competition Testing including failure to provide required whereabouts information set forth in Article 5.5 (Athlete whereabouts requirements) and missed tests, which are declared based on reasonable rules.

2.5 Tampering of Doping Control

Tampering, or Attempting to tamper, with any part of Doping Control.

2.6 Possession of Prohibited Substances and Methods

2.6.1 Possession by an Athlete at any time or place of a substance that is prohibited in Out-of-Competition Testing or a Prohibited Method unless the Athlete establishes that the Possession is pursuant to a therapeutic use exemption granted in accordance with Article 4.4 (Therapeutic Use) or other acceptable justification.

2.6.2 Possession of a Prohibited Substance that is prohibited in Out-of-Competition Testing or a Prohibited Method by Athlete Support Personnel in connection with an Athlete, Event or training, unless the Athlete Support Personnel establishes that the Possession is pursuant to a therapeutic use exemption granted to an Athlete in accordance with Article 4.4 (Therapeutic Use) or other acceptable justification.

2.7 Trafficking in any Prohibited Substance or Prohibited Method.

2.8 Administration of a Prohibited Substance

Administration or Attempted administration of a Prohibited Substance or Prohibited Method to any Athlete, or assisting, encouraging, aiding, abetting, covering up or any other type of complicity involving an anti-doping rule violation or any Attempted violation.

3 PROOF OF DOPING

3.1 Burdens and Standards of Proof

FITA and its Member Associations shall have the burden of establishing that an anti-doping rule violation has occurred. The standard of proof shall be whether FITA or its Member Associations has established an anti-doping rule violation to the comfortable satisfaction of the hearing body bearing in mind the seriousness of the allegation which is made. This standard of proof in all cases is greater than a mere balance of probability but less than proof beyond a reasonable doubt. Where these Rules place the burden of proof upon the Athlete or other Person alleged to have committed an anti-doping rule violation to rebut a presumption or establish specified facts or circumstances, the standard of proof shall be by a balance of probability.

3.2 Methods of Establishing Facts and Presumptions

Facts related to anti-doping rule violations may be established by any reliable means, including admissions. The following rules of proof shall be applicable in doping cases:

3.2.1 WADA-accredited laboratories are presumed to have conducted Sample analysis and custodial procedures in accordance with the International Standard for laboratory analysis. The Athlete may rebut this presumption by establishing that a departure from the International Standard occurred.

If the Athlete rebuts the preceding presumption by showing that a departure from the International Standard occurred, then FITA or its Member Association shall

have the burden to establish that such departure did not cause the Adverse Analytical Finding.

3.2.2 Departures from the International Standard for Testing which did not cause an Adverse Analytical Finding or other anti-doping rule violation shall not invalidate such results. If the Athlete establishes that departures from the International Standard occurred during Testing then FITA or its Member Association shall have the burden to establish that such departures did not cause the Adverse Analytical Finding or the factual basis for the anti-doping rule violation.

4 THE PROHIBITED LIST

4.1 Incorporation of the Prohibited List

These Anti-Doping Rules incorporate the Prohibited List which is published and revised by WADA as described in Article 4.1 of the Code. FITA will make the current Prohibited List available to each Member Association, and each Member Association shall ensure that the current Prohibited List is available to its members and constituents. The Prohibited List in force is available on WADA's website at www.wada-ama.org.

4.2 Prohibited Substances and Prohibited Methods Identified on the Prohibited List

Unless provided otherwise in the Prohibited List and/or a revision, the Prohibited List and revisions shall go into effect under these Anti-Doping Rules three months after publication of the Prohibited List by WADA without requiring any further action by FITA. As described in Article 4.2 of the Code, FITA may upon the recommendation of its Medical Committee request that WADA expand the Prohibited List for the sport of Archery or certain disciplines within the sport of Archery. FITA may also upon the recommendation of its Medical Committee request that WADA include additional substances or methods, which have the potential for abuse in the sport of archery, in the monitoring program described in Article 4.5 of the Code. As provided in the Code, WADA shall make the final decision on such requests by FITA.

4.3 Criteria for Including Substances and Methods on the Prohibited List

As provided in Article 4.4.3 of the Code, WADA's determination of the Prohibited Substances and Prohibited Methods that will be included on the Prohibited List shall be final and shall not be subject to challenge by an Athlete or other Person.

4.4 Therapeutic Use

4.4.1 Athletes with a documented medical condition requiring the use of a Prohibited Substance or a Prohibited Method must first obtain a Therapeutic Use Exemption ("TUE").

4.4.2 Athletes included by FITA in its Registered Testing Pool and other Athletes prior to their participation in any International Event must obtain a TUE from FITA (regardless of whether the Athlete previously has received a TUE at the national level). TUEs granted by FITA shall be reported to the Athlete's Member Association and to WADA. Other Athletes subject to Testing must obtain a TUE from their National Anti-Doping Organization or other body designated by their Member Association. Member Associations shall promptly report any such TUEs to FITA and WADA.

4.4.3 The FITA Executive Committee shall appoint a panel of physicians on recommendation of the FITA Medical Committee to consider requests for TUEs (the "TUE Panel"). Upon FITA's receipt of a TUE request, the Chair of the TUE Panel shall appoint one or more members of the TUE Panel (which may include the Chair) to consider such request. The TUE Panel member(s) so designated shall promptly evaluate such request in accordance with the International Standard for Therapeutic Use Exemptions and render a decision on such request, which shall be the final decision of FITA.

4.4.3.1 International-Level Athletes who are included in the FITA's Registered Testing Pool, must apply to FITA for the TUE at the same time the Athlete first provides whereabouts information to the FITA and, except in emergency situations, no later than 21 days before the Athlete's participation at an International Event.

4.4.3.2 Athletes participating in International Events who are not included in the FITA Registered Testing Pool must, except in emergency situations, request a TUE from FITA no later than 21 days before the Athlete's participation at an International Event.

4.4.3.3 Notification may be by fax or by e-mail but must be confirmed by letter. The FITA TUE Panel will take a decision within 10 days from receipt at the FITA Office.

4.4.4 WADA, at the request of an Athlete or on its own initiation, may review the granting or denial of any TUE to an International Level Athlete or a national level Athlete that is included in a Registered Testing Pool. If WADA determines that the granting or denial of a TUE did not comply with the International Standard for Therapeutic Use Exemptions in force at the time then WADA may reverse that decision. Decisions on TUE's are subject to further appeal as provided in Article 13.

(see: www.wada-ama.org → International Standard for Therapeutic Use Exemption)

4.5 The Prohibited List

The Prohibited List reprinted here is a copy of 'Part Two and Part Three of the World Anti-Doping Code International Standard for the Prohibited List. It is valid as of 1st, January 2004. Since this current list is subject to changes by WADA, please check on WADA's website: www.wada-ama.org for the most recent version of the list.

(The structure of the original text has been maintained to facilitate orientation)

PART TWO

SUBSTANCES AND METHODS PROHIBITED IN-COMPETITION

PROHIBITED SUBSTANCES

S1. STIMULANTS

The following stimulants are prohibited, including both their optical (D- and L-) isomers where relevant:

Adrafinil, amfepramone, amiphenazole, amphetamine, amphetaminil, benzphetamine, bromantan, carphedon, cathine*, clobenzorex, cocaine, dimethylamphetamine, ephedrine**, etilamphetamine, etilefrine, fencamfamin, fenetylline, fenfluramine, fenproporex, furfenorex, mefenorex, mephentermine, mesocarb, methamphetamine, methylamphetamine, methylenedioxyamphetamine, methylenedioxymethamphetamine, methylephedrine**, methylphenidate, modafinil, nikethamide, norfenfluramine, parahydroxyamphetamine, pemoline, phendimetrazine, phenmetrazine, phentermine, prolintane, selegiline, strychnine, *and other substances with similar chemical structure or similar pharmacological effects****.

* ***Cathine*** *is prohibited when its concentration in urine is greater than 5 micrograms per millilitre.*

** *Each of* ***ephedrine*** *and* ***methylephedrine*** *is prohibited when its concentration in urine is greater than 10 micrograms per millilitre.*

*** *The substances included in the 2004 Monitoring Program are not considered as Prohibited Substances.*

S2. NARCOTICS

The following narcotics are prohibited:

buprenorphine, dextromoramide, diamorphine (heroin), hydromorphone, methadone, morphine, oxycodone, oxymorphone, pentazocine, pethidine.

S3. CANNABINOIDS

Cannabinoids (e.g. hashish, marijuana) are prohibited.

S4. ANABOLIC AGENTS

Anabolic agents are prohibited.

1. Anabolic Androgenic Steroids (AAS)

a. **Exogenous*** AAS including but not limited to:
androstadienone, bolasterone, boldenone, boldione, clostebol, danazol, dehydrochloromethyltestosterone, delta1-androstene-3,17-dione, drostanolone, drostanediol, fluoxymesterone, formebolone, gestrinone, 4-hydroxytestosterone, 4-hydroxy-19-nortestosterone, mestenolone, mesterolone, methandienone, metenolone, methandriol, methyltestosterone, mibolerone, nandrolone, 19-norandrostenediol,
19-norandrostenedione, norbolethone, norethandrolone, oxabolone, oxandrolone, oxymesterone, oxymetholone, quinbolone, stanozolol, stenbolone, 1-testosterone (delta1-dihydro-testosterone), trenbolone, tetrahydrogestrinone (THG).
and their analogues#.

b. **Endogenous**** AAS including but not limited to:
androstenediol, androstenedione, dehydroepiandrosterone (DHEA), dihydrotestosterone, testosterone *and their analogues#.*

Where a Prohibited Substance (as listed above) is capable of being produced by the body naturally, a Sample will be deemed to contain such Prohibited Substance where the concentration of the Prohibited Substance or its metabolites or markers and/or any other relevant ratio(s) in the Athlete's Sample so deviates from the range of values normally found in humans so as not to be consistent with normal endogenous production. A Sample shall not be deemed to contain a Prohibited Substance in any such case where the Athlete proves by evidence that the concentration of the Prohibited Substance or its metabolites or markers and/or the relevant ratio(s) in the Athlete's Sample is attributable to a pathological or physiological condition. In all cases, and at any concentration, the laboratory will report an adverse finding if, based on any reliable analytical method, it can show that the Prohibited Substance is of exogenous origin.

If the laboratory result is not conclusive and no concentration as referred to in the above paragraph is found, the relevant Anti-Doping Organization shall conduct a further investigation if there are serious indications, such as a comparison to reference steroid profiles, for a possible Use of a Prohibited Substance.

If the laboratory has reported the presence of a T/E ratio greater than six (6) to one (1) in the urine, further investigation is obligatory in order to determine whether the ratio is due to a physiological or pathological condition.

In both cases, the investigation will include a review of any previous tests, subsequent tests and/or results of endocrine investigations. If previous tests are not available, the Athlete

shall undergo an endocrine investigation or be tested unannounced at least three times within a three-month period.
Failure of the Athlete to co-operate in the investigations will result in considering the Athlete's Sample to contain a Prohibited Substance.

2. Other Anabolic Agents

Clenbuterol, zeranol.

For purposes of this section:
** **"exogenous"** refers to a substance which is not capable of being produced by the body naturally.*
*** **"endogenous"** refers to a substance which is capable of being produced by the body naturally.*
*# an "**analogue**" is defined as "a substance derived from the modification or alteration of the chemical structure of another substance while retaining a similar pharmacological effect."*

S5. PEPTIDE HORMONES

The following substances are prohibited, including their mimetics*, analogues# and releasing factors:

1. **Erythropoietin (EPO);**
2. **Growth hormone (hGH) and Insulin-like Growth Factor (IGF-1);**
3. **Chorionic Gonadotrophin (hCG)** prohibited in males only;
4. **Pituitary and synthetic gonadotrophins (LH)** prohibited in males only;
5. **Insulin;**
6. **Corticotrophins.**

Unless the Athlete can demonstrate that the concentration was due to a physiological or pathological condition, a Sample will be deemed to contain a Prohibited Substance (as listed above) where the concentration of the Prohibited Substance or its metabolites and/or relevant ratios or markers in the Athlete's Sample so exceeds the range of values normally found in humans so as not to be consistent with normal endogenous production.

The presence of analogues, mimetics, diagnostic marker(s) or releasing factors of a hormone listed above or of any other finding which indicate(s) that the substance detected is not the naturally present hormone, will be reported as an adverse analytical finding.

For purposes of this section:
** a **"mimetic"** is defined as a substance with pharmacological effect similar to that of another substance, regardless of the fact that it has a different chemical structure.*
*# an "**analogue**" is defined as "a substance derived from the modification or alteration of the chemical structure of another substance while retaining a similar pharmacological effect."*

S6. BETA-2 AGONISTS

All beta-2 agonists including their D- and L- isomers are prohibited except that formoterol, salbutamol, salmeterol and terbutaline are permitted by inhalation only to prevent and/or treat asthma and exercise-induced asthma/broncho-constriction. A medical notification in accordance with section 8 of the International Standard for Therapeutic Use Exemptions is required.

Despite the granting of a TUE, when the Laboratory has reported a concentration of salbutamol (free plus glucuronide) greater than 1000 ng/mL, this will be considered as an adverse analytical finding unless the athlete proves that the abnormal result was the consequence of the therapeutic use of inhaled salbutamol.

S7. AGENTS WITH ANTI-OESTROGENIC ACTIVITY

Aromatase inhibitors, clomiphene, cyclofenil, tamoxifen are prohibited only in males.

S8. MASKING AGENTS

Masking agents are prohibited. They are products that have the potential to impair the excretion of Prohibited Substances, to conceal their presence in urine or other Samples used in doping control, or to change haematological parameters.

Masking agents include but are not limited to:
Diuretics**, epitestosterone, probenecid, plasma expanders (e.g. dextran, hydroxyethyl starch.)

* *A medical approval in accordance with section 7 of the International Standard for Therapeutic Use Exemptions is not valid if an Athlete's urine contains a diuretic in association with threshold or sub-threshold levels of a Prohibited Substance(s).*

Diuretics include :

acetazolamide, amiloride, bumetanide, canrenone, chlortalidone, etacrynic acid, furosemide, indapamide, mersalyl, spironolactone, thiazides (e.g. bendroflumethiazide, chlorothiazide, hydrochlorothiazide) and triamterene*, and other substances with similar chemical structure or similar pharmacological effects.*

S.9 GLUCOCORTICOSTEROIDS

Glucocorticosteroids are prohibited when administered orally, rectally, or by intravenous or intramuscular administration.
All other administration routes require a medical notification in accordance with section 8 of the International Standard for Therapeutic Use Exemptions.

PROHIBITED METHODS

M1. ENHANCEMENT OF OXYGEN TRANSFER

The following are prohibited:
a Blood doping. Blood doping is the use of autologous, homologous or heterologous blood or red blood cell products of any origin, other than for legitimate medical treatment.

b The Use of products that enhance the uptake, transport or delivery of oxygen, e.g. erythropoietins, modified haemoglobin products including but not limited to haemoglobin-based blood substitutes, microencapsulated haemoglobin products, perfluorochemicals, and efaproxiral (RSR13).

M2. PHARMACOLOGICAL, CHEMICAL AND PHYSICAL MANIPULATION

Pharmacological, chemical and physical manipulation is the *Use* of substances and methods, including masking agents, which alter, attempt to alter or may reasonably be expected to alter the integrity and validity of specimens collected in doping controls.
These include but are not limited to catheterisation, urine substitution and/or tampering, inhibition of renal excretion and alterations of testosterone and epitestosterone concentrations.

M3. GENE DOPING

Gene or cell doping is defined as the non-therapeutic use of genes, genetic elements and/or cells that have the capacity to enhance athletic performance.

SUBSTANCES AND METHODS PROHIBITED IN- AND OUT-OF-COMPETITION

PROHIBITED SUBSTANCES

(All categories listed hereunder refer to all those substances and methods listed in the relevant section)

S4. ANABOLIC AGENTS
S5. PEPTIDE HORMONES
S6. BETA-2 AGONISTS*
S7. AGENTS WITH ANTI-OESTROGENIC ACTIVITY
S8. MASKING AGENTS

*(*Only clenbuterol, and salbutamol when its concentration in urine is greater than 1000ng/mL)*

PROHIBITED METHODS

M1. ENHANCEMENT OF OXYGEN TRANSFER
M2. PHARMACOLOGICAL, CHEMICAL AND PHYSICAL MANIPULATION
M3. GENE DOPING

SUBSTANCES PROHIBITED IN PARTICULAR SPORTS

P.1 ALCOHOL

Alcohol (ethanol) is prohibited *in-Competition* only, in the following sports. Detection will be conducted by breath analysis and/or blood. The doping violation threshold for each Federation is reported in parenthesis. If no threshold is indicated, the presence of any quantity of alcohol shall constitute a doping violation.

Archery (FITA) (0.10 g/L)

P.2 BETA-BLOCKERS

Unless otherwise specified, beta-blockers are prohibited *in-Competition* only, in the following sports.

Archery (FITA) (also prohibited out of competition)

Beta-blockers include, but are not limited to, the following:

acebutolol, alprenolol, atenolol, betaxolol, bisoprolol, bunolol, carteolol, carvedilol, celiprolol, esmolol, labetalol, levobunolol, metipranolol, metoprolol, nadolol, oxprenolol, pindolol, propranolol, sotalol, timolol.

P.3 DIURETICS

Diuretics are prohibited in- and out- of competition in all sports as masking agents. However, in the following weight-classified sports and sports where weight loss can enhance performance, no Therapeutic Use Exemptions shall be granted for use of diuretics.

SPECIFIED SUBSTANCES

The WADA Code (10.3) states "The Prohibited List may identify specified substances which are particularly susceptible to unintentional anti-doping rule violations because of their general availability in medicinal products or which are less likely to be successfully abused as doping agents." A doping violation involving such substances may result in a reduced sanction as noted in the Code provided that the "…Athlete can establish that the Use of such a specified substance was not intended to enhance sport performance…"

"Specified Substances" are listed below:

Stimulants: ***ephedrine, L-methylamphetamine, methylephedrine*.**
Cannabinoids
Inhaled Beta-2 Agonists (*except clenbuterol*).
Diuretics (*this does not apply to section P3***).**
Masking Agents: ***probenecid*.**
Beta Blockers
Glucocorticosteroids
Alcohol

PART THREE:

THE 2004 MONITORING PROGRAM

The *WADA Code (4.5)* states *"WADA, in consultation with other Signatories and governments, shall establish a monitoring program regarding substances which are not on the Prohibited List, but which WADA wishes to monitor in order to detect patterns of misuse in sport."*

The following substances are placed on the 2004 Monitoring List:

Stimulants: *In-Competition* Only: ***caffeine, phenylephrine, phenylpropanolamine, pipradrol, pseudoephedrine, synephrine.***

Narcotics: *In-Competition* Only: ***morphine/codeine ratio***.

5 TESTING

5.1 Authority to Test

All Athletes affiliated with a Member Association shall be subject to In-Competition Testing by FITA, the Athlete's Member Association, and any other Anti-Doping Organization responsible for Testing at a Competition or Event in which they participate. All Athletes affiliated with a Member Association shall also be subject to Out-of-Competition Testing at any time or place, with or without advance notice, by FITA, WADA, the Athlete's Member Association, the National Anti-Doping Organization of any country where the Athlete is present, the IOC during the Olympic Games, and the IPC during Paralympic Games.

5.2 Responsibility for FITA Testing

The FITA Medical Committee shall be responsible for overseeing all Testing conducted by FITA. Testing may be conducted by members of the FITA Medical Committee or by other qualified persons so authorized by FITA.

5.3 Testing Standards

Testing conducted by FITA and its Member Associations and Continental Associations shall be in substantial conformity with the International Standard for Testing in force at the time of Testing (see: www.wada-ama.org).

5.3.1 Blood Samples may be used either to detect Prohibited Substances or Prohibited Methods or for screening procedure purposes only. If the blood is collected for screening only, it will have no other consequences for the Athlete other than to identify him/her for a urine test under these anti-doping rules. In these circumstances, FITA may decide at its own discretion which blood parameters are to be measured in the screening Sample and what levels of those parameters will be used to indicate that an Athlete should be selected for a urine test.

5.3.2 Alcohol tests: alcohol is considered to be a doping substance. Alcohol should not be consumed before or during a Competition.

5.3.2.1 If an alcohol test performed on an Athlete results in an Adverse Analytical Finding before the end of an Event, the Athlete will be withdrawn from the Event and the case will be forwarded to the Anti Doping Administrator for results management.

5.3.2.2 The alcohol test is performed by the testing of expired air.

5.3.2.3 Selection for alcometer tests will be carried out by random selection at the end of the shooting matches or of distances shot on the same day. Athletes selected for urine samples will also be tested for alcohol. Additional tests may be carried out at any time during the Competition at the discretion of the doping control officer.

5.3.2.4 If the test of expired air exceeds the equivalent of a blood alcohol concentration of 0.1 promille (parts per thousand) a second test of expired air will be performed 10 minutes later using a different alcometer. If the second test of expired air still exceeds a reading equivalent to a blood alcohol concentration of 0.1 promille (parts per thousand), this will result in an Adverse Analytical Finding.

5.4 Coordination of Testing

FITA and Member Associations shall promptly report completed tests to the WADA clearinghouse to avoid unnecessary duplication in Testing.

5.5 Athlete Whereabouts Requirements

5.5.1 FITA has a Registered Testing Pool of those Athletes who are required to provide up-to-date whereabouts information to FITA. FITA may revise its Registered Testing Pool from time to time as appropriate. Each Athlete in the Registered Testing Pool shall file quarterly reports with FITA on forms provided by FITA which specify on a daily basis the locations and times where the Athlete will be residing, training and competing. Athletes shall update this information as necessary so that it is current at all times. The ultimate responsibility for providing whereabouts information rests with each Athlete, however, it shall be the responsibility of each Member Association to use its best efforts to assist FITA in obtaining whereabouts information as requested by FITA.

5.5.1.1 The following are members of the FITA Registered Testing Pool:

- From the previous World Outdoor and Indoor Target World Championships: all individual medallists and team gold medallists in the recurve division, and all individual medallists in the compound division.
- From the previous World Field Championships: women and men team gold medallists.
- From the previous World Junior Outdoor Championships: all individual gold medallists in the recurve and compound divisions.
- The top 25 ranked Athletes of the individual World Ranking for the recurve division and the top 10 ranked Athletes of the individual World Ranking for the Compound division.
- In the Olympic Qualification Period (from the World Outdoor Target Championships preceding the Olympic Games up to the Olympic Games), every Athlete who has obtained a quota place for his country, regardless whether independently if he or she will be participating in the Olympic Games.
- The FITA Medical Committee can include any other Athlete, member of a national team, in the Registered Testing Pool by written notice to the Member Association and the Athlete concerned.
- If an Athlete no longer fulfils any of the above criteria, he will remain in the registered testing pool until the end of the Calendar year.

The list of Athletes in the Registered Testing Pool will be available on the FITA Website.

5.5.2 Any Athlete in the FITA Registered Testing Pool who is unavailable for Testing on three attempts during any period of 12 consecutive months shall be considered to have committed an anti-doping rule violation pursuant to Article 2.4. For each attempt, the Doping Control Officer shall visit all locations during the times specified by the Athlete for that date and shall stay two hours at each location. Notification

shall be sent to the Athlete between each attempt which is to be counted as an unavailable test.

5.5.3 Any Athlete in the FITA Registered Testing Pool who fails to timely submit a required quarterly whereabouts report after receipt of three formal written warnings from FITA or a Member Association to do so in the preceding 12 months shall be considered to have committed an anti-doping rule violation pursuant to Article 2.4.

5.5.4 Each Member Association shall also assist their National Anti-Doping Organization in establishing a national level Registered Testing Pool of top-level national Athletes who are not already included in FITA's Registered Testing Pool. The Member Association/National Anti-Doping Organization may establish its own whereabouts reporting requirements and criteria for Article 2.4 violations applicable to those Athletes.

5.5.5 Whereabouts information provided pursuant to Articles 5.5.1 and 5.5.4 shall be shared with WADA and other Anti-Doping Organizations having jurisdiction to test an Athlete on the strict condition that it be used only for Doping Control purposes.

5.6 Retirement and Return to Competition

5.6.1 An Athlete who has been identified by FITA for inclusion in FITA's Registered Testing Pool shall continue to be subject to these Anti-Doping Rules, including the obligation to be available for No Advance Notice Out-of-Competition Testing, unless and until the Athlete gives written notice to FITA that he or she has retired or until he or she no longer satisfies the criteria for inclusion in the FITA's Registered Testing Pool and has been so informed by FITA.

5.6.2 An Athlete who has given notice of retirement to FITA may not resume competing unless he or she notifies FITA at least six months before he or she expects to return to competition and is available for unannounced Out-of-Competition Testing, at any time during the period before actual return to competition.

5.6.3 Member Associations/National Anti-Doping Organizations may establish similar requirements for retirement and returning to competition for Athletes in the national Registered Testing Pool.

5.7 Selection of Athletes to be Tested

5.7.1 At International Events, the FITA Medical Committee shall determine the number of finishing placement tests, random tests and target tests to be performed.

5.7.1.1 At World Outdoor and Indoor Target World Championships there shall be a minimum of thirty-five (35) tests of which the following are mandatory:

- Each individual medallist in all divisions.
- One (1) randomly chosen team member of each team medal winners in all divisions.
- Eleven (11) other tests of which two will be random and the other ones being random or targeted by the FITA Medical Committee, being not necessarily linked to final placements, in order to maximize the diversity of athletes tested or based on information provided by the WADA Clearinghouse on previous tests.

The number of tests will be determined by the FITA Medical Committee in cooperation with the Coordination Committee of the World Championships.

5.7.1.2 At World Outdoor Junior, Field and Ski/Archery Championships there shall be a minimum of fifteen (15) tests of which the following are mandatory:

- Each individual medallist of a randomly chosen category.
- One (1) randomly chosen team member of each team medal winner of a randomly chosen category.
- Nine (9) other tests of which two will be random and the other ones being random or targeted by the FITA Medical Committee, being not necessarily linked to final placements in order to maximize the diversity of athletes tested or based on information provided by the WADA Clearinghouse on previous tests.

The number of tests will be determined by the FITA Medical Committee in cooperation with the Coordination Committee of the World Championships.

5.7.1.3 At World Championships of other disciplines there shall be a minimum of five (5) tests. The number of tests will be determined by the Medical Committee in cooperation with the Coordination Committee of the World Championships.

5.7.1.4 At Continental Qualifiers for the Olympic Games the Athletes who obtain quota places are subject to mandatory doping testing.

5.7.1.5 At World Ranking Tournaments that have 200 preliminary registrations, there shall be a minimum of five (5) doping tests. A minimum of five (5) doping tests is recommended for all other World Ranking Tournaments.

5.7.1.6 At Continental Championships, each Continental Association shall determine the number of Athletes selected for testing and shall submit their plan to the FITA Medical Committee for approval prior to the Championship.

5.7.2 At National Events, each Member Association shall determine the number of Athletes selected for Testing in each Competition and the procedures for selecting the Athletes for Testing.

5.7.3 In addition to the selection procedures set forth in Articles 5.7.1 and 5.7.2 above, the FITA Medical Committee at International Events, and the Member Association at National Events, may also select Athletes or teams for Target Testing so long as such Target Testing is not used for any purpose other than legitimate Doping Control purposes.

5.7.4 Athletes shall be selected for Out-of-Competition Testing by the FITA Medical Committee and by Member Associations through a process that substantially complies with the International Standard for Testing in force at the time of selection.

5.8 Independent Observers

Member Associations and the organizing committees for Member Associations Events shall provide access to Independent Observers at Events as directed by FITA. FITA and its Continental Associations shall provide access to Independent Observers at their respective International Events.

6 ANALYSIS OF SAMPLES

Doping Control Samples collected under these Anti-Doping Rules shall be analysed in accordance with the following principles:

6.1 Use of Approved Laboratories

FITA shall send Doping Control Samples for analysis only to WADA-accredited laboratories or as otherwise approved by WADA. The choice of the WADA-accredited laboratory (or other method approved by WADA) used for the Sample analysis shall be determined exclusively by FITA.

6.2 Substances Subject to Detection

Doping Control Samples shall be analysed to detect Prohibited Substances and Prohibited Methods identified on the Prohibited List and other substances as may be directed by WADA pursuant to the Monitoring Program described in Article 4.5 of the Code.

6.3 Research on Samples

No Sample may be used for any purpose other than the detection of substances (or classes of substances) or methods on the Prohibited List, or as otherwise identified by WADA pursuant to its Monitoring Program, without the Athlete's written consent.

6.4 Standards for Sample Analysis and Reporting

Laboratories shall analyse Doping Control Samples and report results in conformity with the International Standard for Laboratory Analysis (see: www.wada-ama.org).

7 RESULTS MANAGEMENT

7.1 Results Management for Tests Initiated by FITA

Results management for Tests initiated by FITA (including Tests performed by WADA pursuant to agreement with FITA) shall proceed as set forth below:

7.1.1 The results from all analyses must be sent to FITA in encoded form, in a report signed by an authorised representative of the laboratory. All communication must be conducted in such a way that the results of the analyses are confidential.

7.1.2 Upon receipt of an A Sample Adverse Analytical Finding, the FITA Anti-Doping Administrator shall conduct a review to determine whether: (a) an applicable therapeutic use exemption has been granted, or (b) there is any apparent departure from the International Standards for Testing or Laboratory Analysis that undermines the validity of the Adverse Analytical Finding.

7.1.3 If the initial review under Article 7.1.2 does not reveal an applicable therapeutic use exemption or departure from the International Standard for Testing or the International Standard for laboratory analysis in force at the time of Testing or analysis that

undermines the validity of the Adverse Analytical Finding, FITA shall promptly notify the Athlete of: (a) the Adverse Analytical Finding; (b) the anti-doping rule violated, or, in a case under Articles 7.1.8 or 7.1.9, a description of the additional investigation that will be conducted as to whether there is an anti-doping rule violation; (c) the Athlete's right to promptly request the analysis of the B Sample or, failing such request, that the B Sample analysis may be deemed waived; (d) the right of the Athlete and/or the Athlete's representative to attend the B Sample opening and analysis if such analysis is requested; and (e) the Athlete's right to request copies of the A and B Sample laboratory documentation package which includes information as required by the International Standard for Laboratory Analysis.

7.1.4 Arrangements shall be made for Testing the B Sample within three weeks of the notification described in Article 7.1.3. An Athlete may accept the A Sample analytical results by waiving the requirement for B Sample analysis. FITA may nonetheless elect to proceed with the B Sample analysis.

7.1.5 The Athlete and/or his representative shall be allowed to be present at the analysis of the B Sample. Also a representative of the Athlete's Member Association as well as a representative of FITA shall be allowed to be present.

7.1.6 If the B Sample proves negative, the entire test shall be considered negative and the Athlete, his Member Association, and FITA shall be so informed.

7.1.7 If a Prohibited Substance or the Use of a Prohibited Method is identified, the findings shall be reported to the Athlete, his Member Association, FITA, and to WADA.

7.1.8 The FITA Anti-Doping Administrator shall conduct any follow-up investigation as may be required by the Prohibited List. Upon completion of such follow-up investigation, FITA shall promptly notify the Athlete regarding the results of the follow-up investigation and whether or not FITA asserts that an anti-doping rule was violated.

7.1.9 For apparent anti-doping rule violations that do not involve Adverse Analytical Findings, the FITA Anti-Doping Administrator shall conduct any necessary follow-up investigation and shall then promptly notify the Athlete of the anti-doping rule which appears to have been violated, and the basis of the violation.

7.2 Results Management for Tests Initiated During Other International Events

Results management and the conduct of hearings from a Test by the International Olympic Committee, the International Paralympic Committee, or a Major Event Organization, shall be managed, as far as sanctions beyond Disqualification from the Event or the results of the Event, by the FITA Anti-Doping Panel as defined in Article 8.1.1 of these rules.

7.3 Results Management for Tests initiated by Member Associations

Results management conducted by Member Associations shall be consistent with the general principles for effective and fair results management which underlie the detailed provisions set forth in Article 7.1. Results of all Doping Controls shall be reported to FITA within 14 days of the conclusion of the Member Association's results management process. Any apparent anti-doping rule violation by an Athlete

who is a member of that Member Association shall be promptly referred to an appropriate hearing panel established pursuant to the rules of the Member Association or national law. Apparent anti-doping rule violations by Athletes who are members of another Member Association shall be referred to the Athlete's Member Association for hearing.

7.4 Provisional Suspensions

The FITA Executive Committee, after consultation with the FITA Anti-Doping Administrator, may Provisionally Suspend an Athlete prior to the opportunity for a full hearing based on an Adverse Analytical Finding from the Athlete's A Sample or A and B Samples and the review described in Article 7.1. If a Provisional Suspension is imposed, either the hearing in accordance with Article 8 shall be advanced to a date which avoids substantial prejudice to the Athlete, or the Athlete shall be given an opportunity for a Provisional Hearing before imposition of the Provisional Suspension or on a timely basis after imposition of the Provisional Suspension. Member Associations may impose Provisional Suspensions in accordance with the principles set forth in this Article 7.3.

8 RIGHT TO A FAIR HEARING

8.1 Hearings arising out of FITA Testing or Tests at International Event, or Major Games for sanctioning beyond disqualification.

8.1.1 The FITA Executive Committee shall appoint a standing panel consisting of a Chair and five other experts with experience in anti-doping ("FITA Anti-Doping Panel"). The Chair shall be a lawyer. Each panel member shall be independent of his National Member Association in so far as he is not an elected officer, employee or holds a position of responsibility within a Member Association. Each panel member shall serve a term of four years.

8.1.2 When it appears, following the Results Management process described in Article 7, that these Anti-Doping Rules have been violated in connection with FITA Testing or Testing at an International Event then the case shall be assigned to the FITA Anti-Doping Panel for adjudication.

8.1.3 The Chair of the FITA Anti-Doping Panel shall appoint three members from the panel (which may include the Chair) to hear each case. At least one appointed member shall be a lawyer. The appointed members shall have had no prior involvement with the case and shall not have the same nationality as the Athlete or other Person alleged to have violated these Anti-Doping Rules.

8.1.4 Hearings pursuant to this Article shall be completed expeditiously following the completion of the results management process described in Article 7. Hearings held in connection with Events may be conducted on an expedited basis.

8.1.5 The Member Association of the Athlete or other Person alleged to have violated these Anti-Doping Rules may attend the hearing as an observer.

8.1.6 FITA shall keep WADA fully apprised as to the status of pending cases and the result of all hearings.

8.1.7 An Athlete or other Person may forego a hearing by acknowledging the Anti-Doping Rule violation and accepting Consequences consistent with Articles 9 and 10 as proposed by FITA.

8.1.8 Decisions of the FITA Anti-Doping Panel may be appealed to Court of Arbitration for Sport as provided in Article 13.

8.2 Hearings Arising Out of National Testing

8.2.1 When it appears, following the Results Management process described in Article 7, that these Anti-Doping Rules have been violated in connection with Testing other than in connection with FITA Testing or Testing at an International Event, the Athlete or other Person involved shall be brought before a disciplinary panel of the Athlete or other Person's Member Association for a hearing to adjudicate whether a violation of these Anti-Doping Rules occurred and if so what Consequences should be imposed.

8.2.2 Hearings pursuant to this Article 8.2 shall be completed expeditiously and in all cases within three months of the completion of the Results Management process described in Article 7. Hearings held in connection with Events may be conducted by an expedited process. If the completion of the hearing is delayed beyond three months, FITA may elect to bring the case directly before the FITA Anti-Doping Panel at the responsibility and at the expense of the Member Association.

8.2.3 Member Associations shall keep FITA and WADA fully apprised as to the status of pending cases and the results of all hearings.

8.2.4 FITA and WADA shall have the right to attend hearings as an observer.

8.2.5 The Athlete or other Person may forego a hearing by acknowledging the violation of these Anti-Doping Rules and accepting Consequences consistent with Articles 9 and 10 as proposed by the Member Association.

8.2.6 Decisions by Member Associations, whether as the result of a hearing or the Athlete or other Person's acceptance of Consequences, may be appealed as provided in Article 13.

8.2.7 Hearing decisions by the Member Association shall not be subject to further administrative review at the national level except as provided in Article 13 or required by applicable national law.

8.3 Principles for a Fair Hearing

All hearings pursuant to either Article 8.1 or 8.2 shall respect the following principles:

- A timely hearing;
- Fair and impartial hearing body;
- The right to be represented by counsel at the Person's own expense;
- The right to be fairly and timely informed of the asserted anti-doping rule violation;

- The right to respond to the asserted anti-doping rule violation and resulting Consequences;
- The right of each party to present evidence, including the right to call and question witnesses (subject to the hearing body's discretion to accept testimony by telephone or written submission);
- The Person's right to an interpreter at the hearing, with the Anti-Doping Panel to determine the identity, and responsibility for the cost of the interpreter; and
- A timely, written, reasoned decision.

9 AUTOMATIC DISQUALIFICATION OF INDIVIDUAL RESULTS

A violation of these Anti-Doping Rules in connection with an In-Competition test automatically leads to Disqualification of the individual result obtained in that Competition with all resulting consequences, including forfeiture of any medals, points and prizes.

10 SANCTIONS ON INDIVIDUALS

10.1 Disqualification of Results in Event during which an Anti-Doping Rule Violation occurs

An Anti-Doping Rule violation occurring during or in connection with an Event may lead to Disqualification of all of the Athlete's individual results obtained in that Event with all consequences, including forfeiture of all medals, points and prizes, except as provided in Article 10.1.1.

10.1.1 If the Athlete establishes that he or she bears No Fault or Negligence for the violation, the Athlete's individual results in the other Competition shall not be Disqualified unless the Athlete's results in Competition other than the Competition in which the anti-doping rule violation occurred were likely to have been affected by the Athlete's anti-doping rule violation.

10.2 Imposition of Ineligibility for Prohibited Substances and Prohibited Methods

Except for the specified substances identified in Article 10.3, the period of Ineligibility imposed for a violation of Article 2.1 (presence of Prohibited Substance or its Metabolites or Markers), Article 2.2 (Use or Attempted Use of Prohibited Substance or Prohibited Method) and Article 2.6 (Possession of Prohibited Substances and Methods) shall be:

- First violation: Two (2) years' Ineligibility.
- Second violation: Lifetime Ineligibility.

However, the Athlete or other Person shall have the opportunity in each case, before a period of Ineligibility is imposed, to establish the basis for eliminating or reducing this sanction as provided in Article 10.5.

10.3 Specified Substances

The Prohibited List may identify specified substances which are particularly susceptible to unintentional anti-doping rules violations because of their general availability in medicinal products or which are less likely to be successfully abused as doping agents. Where an Athlete can establish that the Use of such a specified substance was not intended to enhance sport performance, the period of Ineligibility found in Article 10.2 shall be replaced with the following:

- First violation: At a minimum, a warning and reprimand and no period of Ineligibility from future Events, and at a maximum, one (1) year's Ineligibility.
- Second violation: Two (2) years' Ineligibility.
- Third violation: Lifetime Ineligibility.

However, the Athlete or other Person shall have the opportunity in each case, before a period of Ineligibility is imposed, to establish the basis for eliminating or reducing (in the case of a second or third violation) this sanction as provided in Article 10.5.

10.4 Ineligibility for Other Anti-Doping Rule Violations

The period of Ineligibility for other violations of these Anti-Doping Rules shall be:

10.4.1 For violations of Article 2.3 (refusing or failing to submit to Sample collection) or Article 2.5 (Tampering with Doping Control), the Ineligibility periods set forth in Article 10.2 shall apply.

10.4.2 For violations of Article 2.7 (Trafficking) or Article 2.8 (administration of Prohibited Substance or Prohibited Method), the period of Ineligibility imposed shall be a minimum of four (4) years up to lifetime Ineligibility. An anti-doping rule violation involving a Minor shall be considered a particularly serious violation, and, if committed by Athlete Support Personnel for violations other than specified substances referenced in Article 10.3, shall result in lifetime Ineligibility for such Athlete Support Personnel. In addition, violations of such Articles which also violate non-sporting laws and regulations, may be reported to the competent administrative, professional or judicial authorities.

10.4.3 For violations of Article 2.4 (Whereabouts Violations or Missed Tests), the period of Ineligibility shall be:

- First violation: Three (3) months to one (1) year Ineligibility.
- Second and subsequent violations: Two (2) years' Ineligibility.

10.5 Elimination or Reduction of Period of Ineligibility Based on Exceptional Circumstances

10.5.1 If the Athlete establishes in an individual case involving an anti-doping rule violation under Article 2.1 (presence of Prohibited Substance or its Metabolites or Markers) or Use of a Prohibited Substance or Prohibited Method under Article 2.2 that he or she bears No Fault or Negligence for the violation, the otherwise applicable

period of Ineligibility shall be eliminated. When a Prohibited Substance or its Markers or Metabolites is detected in an Athlete's Specimen in violation of Article 2.1 (presence of Prohibited Substance), the Athlete must also establish how the Prohibited Substance entered his or her system in order to have the period of Ineligibility eliminated. In the event this Article is applied and the period of Ineligibility otherwise applicable is eliminated, the anti-doping rule violation shall not be considered a violation for the limited purpose of determining the period of Ineligibility for multiple violations under Article 10.2, 10.3 and 10.6.

10.5.2 This Article 10.5.2 applies only to anti-doping rule violations involving Article 2.1 (presence of Prohibited Substance or its Metabolites or Markers), Use of a Prohibited Substance or Prohibited Method under Article 2.2, failing to submit to Sample collection under Article 2.3, or administration of a Prohibited Substance or Prohibited Method under Article 2.8. If an Athlete establishes in an individual case involving such violations that he or she bears No Significant Fault or Negligence, then the period of Ineligibility may be reduced, but the reduced period of Ineligibility may not be less than one-half of the minimum period of Ineligibility otherwise applicable. If the otherwise applicable period of Ineligibility is a lifetime, the reduced period under this section may be no less than 8 years. When a Prohibited Substance or its Markers or Metabolites is detected in an Athlete's Specimen in violation of Article 2.1 (presence of Prohibited Substance), the Athlete must also establish how the Prohibited Substance entered his or her system in order to have the period of Ineligibility reduced.

10.5.3 The FITA Council upon recommendation of the Anti-Doping Panel may also reduce the period of Ineligibility in an individual case where the Athlete has provided substantial assistance to FITA which results in FITA discovering or establishing an anti-doping rule violation by another Person involving Possession under Article 2.6.2 (Possession by Athlete Support Personnel), Article 2.7 (Trafficking), or Article 2.8 (administration to an Athlete). The reduced period of Ineligibility may not, however, be less than one-half of the minimum period of Ineligibility otherwise applicable. If the otherwise applicable period of Ineligibility is a lifetime, the reduced period under this Article may be no less than 8 years.

10.6 Rules for Certain Potential Multiple Violations

10.6.1 For purposes of imposing sanctions under Article 10.2, 10.3 and 10.4, a second anti-doping rule violation may be considered for purposes of imposing sanctions only if the FITA (or its Member Association) can establish that the Athlete or other Person committed the second anti-doping rule violation after the Athlete or other Person received notice, or after FITA (or its Member Association) made a reasonable attempt to give notice, of the first anti-doping rule violation; If FITA (or its Member Association) cannot establish this, the violations shall be considered as one single first violation, and the sanction imposed shall be based on the violation that carries the more severe sanction.

10.6.2 Where an Athlete, based on the same Doping Control, is found to have committed an anti-doping rule violation involving both a specified substance under Article 10.3 and another Prohibited Substance or Prohibited Method, the Athlete shall be

considered to have committed a single anti-doping rule violation, but the sanction imposed shall be based on the Prohibited Substance or Prohibited Method that carries the most severe sanction.

10.6.3 Where an Athlete is found to have committed two separate anti-doping rule violations, one involving a specified substance governed by the sanctions set forth in Article 10.3 (specified substances) and the other involving a Prohibited Substance or Prohibited Method governed by the sanctions set forth in Article 10.2 or a violation governed by the sanctions in Article 10.4.1, the period of Ineligibility imposed for the second offence shall be at a minimum two years' Ineligibility and at a maximum three years' Ineligibility. Any Athlete found to have committed a third anti-doping rule violation involving any combination of specified substances under Article 10.3 and any other anti-doping rule violation under Article 10.2 or 10.4.1 shall receive a sanction of lifetime Ineligibility.

10.7 Disqualification of Results in Competitions Subsequent to Sample Collection

In addition to the automatic Disqualification of the results in the Competition which produced the positive Sample under Article 9 (Automatic Disqualification of Individual Results), all other competitive results obtained from the date a positive Sample was collected (whether In-Competition or Out-of-Competition), or other doping violation occurred, through the commencement of any Provisional Suspension or Ineligibility period, shall, unless fairness requires otherwise, be Disqualified with all of the resulting consequences including forfeiture of any medals, points and prizes.

10.8 Commencement of Ineligibility Period

The period of Ineligibility shall start on the date of the hearing decision providing for Ineligibility or, if the hearing is waived, on the date Ineligibility is accepted or otherwise imposed. Any period of Provisional Suspension (whether imposed or voluntarily accepted) shall be credited against the total period of Ineligibility to be served. Where required by fairness, such as delays in the hearing process or other aspects of Doping Control not attributable to the Athlete, FITA or the Anti-Doping Organization imposing the sanction may start the period of Ineligibility at an earlier date commencing as early as the date of Sample collection.

10.9 Status During Ineligibility

No Person who has been declared Ineligible may, during the period of Ineligibility, participate in any capacity in an Event or activity (other than authorized anti-doping education or rehabilitation programs) authorized or organized by FITA or any Member Association. In addition, for any anti-doping rule violation not involving specified substances described in Article 10.3, some or all sport-related financial support or other sport-related benefits received by such Person will be withheld by FITA and its Member Associations. A Person subject to a period of Ineligibility longer than four years may, after completing four years of the period of Ineligibility, participate in local sport events in a sport other than sports subject to the jurisdictions of FITA and its Member Associations, but only so long as the local sport

event is not at a level that could otherwise qualify such Person directly or indirectly to compete in (or accumulate points toward) a national championship or International Event.

10.10 Reinstatement Testing

As a condition to regaining eligibility at the end of a specified period of Ineligibility, an Athlete must, during any period of Provisional Suspension or Ineligibility, make him or herself available for Out-of-Competition Testing by FITA, the applicable Member Association, and any other Anti-Doping Organization having Testing jurisdiction, and must provide current and accurate whereabouts information as provided in Article 5.5. If an Athlete subject to a period of Ineligibility retires from sport and is removed from Out-of-Competition Testing pools and later seeks reinstatement, the Athlete shall not be eligible for reinstatement until the Athlete has notified FITA and the applicable Member Association and has been subject to Out-of-Competition Testing for a period of time equal to the longer of the period set forth in Article 5.6 or the period of Ineligibility remaining as of the date the Athlete had retired. During such remaining period of Ineligibility, a minimum of 2 tests must be conducted on the Athlete with at least three months between each test. The Member Association shall be responsible for conducting the necessary tests, but tests by any Anti-Doping Organization may be used to satisfy the requirement. The results of such tests shall be reported to FITA. Once the period of an Athlete's suspension has expired, and the Athlete has fulfilled the conditions of reinstatement, then the Athlete will become automatically re-eligible and no application by the Athlete or by the Athlete's Member Association will then be necessary.

11 CONSEQUENCES TO TEAMS

If a member of a team is found to have committed a violation of these Anti-Doping Rules during an Event, the team shall be Disqualified from the Event.

12 SANCTIONS AND COSTS ASSESSED AGAINST MEMBER ASSOCIATIONS

12.1 The FITA Council has the authority to withhold some or all funding or other non-financial support to Member Associations that are not in compliance with these Anti-Doping Rules.

12.2 Member Associations not complying with FITA Anti-Doping Rules will be obliged by FITA Council to reimburse FITA for all costs (including but not limited to laboratory fees, hearing expenses and travel) related to a violation of these Anti-Doping Rules committed by an Athlete or other Person affiliated with that Member Association. All costs linked to the B-sample analysis are at the charge of the athlete unless the B-test proves to be negative.

12.3 FITA Council upon recommendation of its Anti-Doping Administrator may decide to take additional disciplinary action against Member Associations with respect to recognition, the eligibility of its officials and athletes to participate in International Events and fines based on the following:

12.3.1 Four or more violations of these Anti-Doping Rules (other than violations involving Articles 2.4 and 10.3) are committed by Athletes or other Persons affiliated with a Member Association within a 12-month period in testing conducted by FITA or Anti-Doping Organizations other than the Member Association or its National Anti-Doping Organization.

12.3.2 More than one Athlete or another Person from a Member Association commit an Anti-Doping Rule violation during an International Event.

12.3.3 A Member Association has failed to make diligent efforts to keep FITA informed about an Athlete's whereabouts after receiving a request for that information from FITA.

13 APPEALS

13.1 Decisions Subject to Appeal

Decisions made under these Anti-Doping Rules may be appealed as set forth below in Article 13.2 through 13.4. Such decisions shall remain in effect while under appeal unless the appellate body orders otherwise. Before an appeal is commenced, any post-decision review authorized in Article 8.2 (8.2.1-8.2.7) must be exhausted.

13.2 Appeals against decisions regarding Anti-Doping Rule violations, Consequences, and Provisional Suspensions

A decision that an anti-doping rule violation was committed, a decision imposing Consequences for an anti-doping rule violation, a decision that no anti-doping rule violation was committed, a decision that FITA or its Member Association lacks jurisdiction to rule on an alleged anti-doping rule violation or its Consequences, and a decision to impose a Provisional Suspension as a result of a Provisional Hearing or otherwise in violation of Article 7.4 may be appealed exclusively as provided in this Article 13.2. Notwithstanding any other provision herein, the only Person that may appeal from a Provisional Suspension is the Athlete or other Person upon whom the Provisional Suspension is imposed.

13.2.1 In cases arising from competition in an International Event or in cases involving International-Level Athletes, the decision may be appealed exclusively to the Court of Arbitration for Sport ("CAS") in accordance with the provisions applicable before such court.

13.2.2 In cases involving Athletes that do not have a right to appeal under Article 13.2.1, each Member Association shall have in place an appeal procedure that respects the following principles: a timely hearing; a fair and impartial hearing body; the right to be represented by a counsel at the person’s expense; and a timely, written, reasoned

decision. FITA's rights of appeal with respect to these cases are set forth in Article 13.2.3 below.

13.2.3 In cases under Article 13.2.1, the following parties shall have the right to appeal to CAS: (a) the Athlete or other Person who is the subject of the decision being appealed; (b) the other party to the case in which the decision was rendered; (c) FITA and any other Anti-Doping Organization under whose rules a sanction could have been imposed; (d) the International Olympic Committee or International Paralympic Committee, as applicable, where the decision may have an effect in relation to the Olympic Games or Paralympic Games, including decisions affecting eligibility for the Olympic Games or Paralympic Games; and (e) WADA. In cases under Article 13.2.2, the parties having the right to appeal to the national-level reviewing body shall be as provided in the Member Association's rules but, at a minimum, shall include: (a) the Athlete or other Person who is the subject of the decision being appealed; (b) the other party to the case in which the decision was rendered; (c) FITA; and (d) WADA. For cases under Article 13.2.2, WADA and FITA shall also have the right to appeal to CAS with respect to the decision of the national-level reviewing body.

13.3 Appeals against decisions granting or denying a Therapeutic Use Exemption

Decisions by WADA reversing the grant or denial of a TUE exemption may be appealed exclusively to CAS by the Athlete, FITA, or National Anti-Doping Organization or other body designated by a Member Association which granted or denied the exemption. Decisions to deny therapeutic use exemptions, and which are not reversed by WADA, may be appealed by International-Level Athletes to CAS and by other Athletes to the national level reviewing body described in Article 13.2.2. If the national level reviewing body reverses the decision to deny a therapeutic use exemption, that decision may be appealed to CAS by WADA.

13.4 Appeals against decisions pursuant to Article 12

Decisions by FITA pursuant to Article 12 may be appealed exclusively to CAS by the Member Association.

13.5 Time for Filing Appeals

The time to file an appeal to CAS shall be twenty-one (21) days from the date of receipt of the decision by the appealing party. The above notwithstanding, the following shall apply in connection with appeals filed by a party entitled to appeal but which was not a party to the proceedings having led to the decision subject to appeal:

- a) Within ten (10) days from notice of the decision, such party/ies shall have the right to request from the body having issued the decision a copy of the file on which such body relied;
- b) If such a request is made within the ten-day period, then the party making such request shall have twenty-one (21) days from receipt of the file to file an appeal to CAS.

14 MEMBER ASSOCIATIONS AND FITA ANTI-DOPING RULES

14.1 Incorporation of FITA Anti-Doping Rules

All Member Associations shall comply with these Anti-Doping Rules. These Anti-Doping Rules shall also be incorporated either directly or by reference into each Member Associations Rules. All Member Associations shall include in their regulations the procedural rules necessary to effectively implement these Anti-Doping Rules. Each Member Association shall obtain the written acknowledgement and agreement, in the form attached as Article 20, of all National Team Member Athletes subject to Doping Control and Athlete Support Personnel for such Athletes. Notwithstanding whether or not the required form has been signed, the Rules of each Member Association shall specifically provide that all Athletes, Athlete Support Personnel and other Persons under the jurisdiction of the Member Association shall be bound by these Anti-Doping Rules.

14.2 Statistical Reporting

Member Associations shall report to FITA at the end of every year results of all Doping Controls within their jurisdiction sorted by Athlete and identifying each date on which the Athlete was tested, the entity conducting the test, and whether the test was In-Competition or Out-of-Competition. FITA may periodically publish Testing data received from Member Associations as well as comparable data from Testing under FITA's jurisdiction.

14.3 Doping Control Information Clearing House

When a Member Association has received an Adverse Analytical Finding on one of its Athletes it shall report the following information to FITA and WADA within fourteen (14) days of the process described in Article 7.1.2 and 7.1.3: the Athlete's name, country, sport and discipline within the sport, whether the test was In-Competition or Out-of-Competition, the date of Sample collection and the analytical result reported by the laboratory. The Member Association shall also regularly update FITA and WADA on the status and findings of any review or proceedings conducted pursuant to Article 7 (Results Management), Article 8 (Right to a Fair Hearing) or Article 13 (Appeals), and comparable information shall be provided to FITA and WADA within 14 days of the notification described in Article 7.1.9, with respect to other violations of these Anti-Doping Rules. In any case in which the period of Ineligibility is eliminated under Article 10.5.1 (No Fault or Negligence) or reduced under Article 10.5.2 (No Significant Fault or Negligence), FITA and WADA shall be provided with a written reasoned decision explaining the basis for the elimination or reduction. Neither FITA nor WADA shall disclose this information beyond those persons within their organisations with a need to know until the Member Association has made public disclosure or has failed to make public disclosure as required in Article 14.4 below.

14.4 Public Disclosure

Neither FITA nor its Member Association shall publicly identify Athletes whose Samples have resulted in Adverse Analytical Findings, or who were alleged to have

violated other Articles of these Anti-Doping Rules until it has been determined in a hearing in accordance with Article 8 that an anti-doping rule violation has occurred, or such hearing has been waived, or the assertion of an anti-doping rule violation has not been timely challenged or the Athlete has been Provisionally Suspended. Once a violation of these Anti-Doping Rules has been established, it shall be publicly reported within 20 days.

14.5 Recognition of Decisions by FITA and Member Associations

Any decision of FITA or a Member Association regarding a violation of these Anti-Doping Rules shall be recognized by all Member Associations, which shall take all necessary action to render such decisions effective.

15 RECOGNITION OF DECISIONS BY OTHER ORGANIZATIONS

15.1 Subject to the right to appeal provided in Article 13, the Testing, therapeutic use exemptions and hearing results or other final adjudications of any Signatory to the Code which are consistent with the Code and are within the Signatory's authority, shall be recognized and respected by FITA and its Member Associations. FITA and its Member Associations may recognize the same actions of other bodies which have not accepted the Code if the rules of those bodies are otherwise consistent with the Code.

15.2 Where it is contended that the actions of a Signatory or other body were not in conformity with the Code the FITA Executive Committee may decide to recognize the decision as final or it may decide to forward the matter to the FITA Anti-Doping Panel in accordance with Article 8.

15.3 Any athlete being or becoming a member of a Member Association must disclose to the Member Association any positive test result for which he/she has been sanctioned by any National, Regional, Continental or International Sports organisation, the IOC or any Governments or Governments' Agencies.

16 STATUTE OF LIMITATIONS

No action may be commenced under these Anti-Doping Rules against an Athlete or other Person for a violation of an anti-doping rule contained in these Anti-Doping Rules unless such action is commenced within eight years from the date the violation occurred.

17 FITA'S COMPLIANCE REPORTS TO WADA

FITA will report to WADA on FITA's compliance with the Code every two years and shall explain reasons for any non-compliance.

18 AMENDMENT AND INTERPRETATION OF ANTI-DOPING RULES

18.1 These Anti-Doping Rules are by-laws under the FITA Constitution and may be amended from time to time by FITA Council.

18.2 Except as provided in Article 18.5 and the FITA Constitution and Rules Book, these Anti-Doping Rules shall be interpreted as an independent and autonomous text and not by reference to existing law or statutes.

18.3 The headings used for the various Parts and Articles of these Anti-Doping Rules are for convenience only and shall not be deemed part of the substance of these Anti-Doping Rules or to affect in any way the language of the provisions to which they refer.

18.4 The INTRODUCTION and the following Article 19 DEFINITIONS shall be considered integral parts of these Anti-Doping Rules.

18.5 These Anti-Doping Rules have been adopted pursuant to the applicable provisions of the Code and shall be interpreted in a manner that is consistent with the applicable provisions of the Code. The comments annotating various provisions of the Code may, where applicable, assist in the understanding and interpretation of these Anti-Doping Rules.

18.6 Notice to an Athlete or other Person who is a member of a Member Association may be accomplished by delivery of the notice to the Member Association.

18.7 These Anti-Doping Rules shall not apply retrospectively to matters pending before the date these Anti-Doping Rules come into effect.

19 DEFINITIONS

Adverse Analytical Finding:

A report from a laboratory or other approved **Testing** entity that identifies in a **Specimen** the presence of a **Prohibited Substance** or its **Metabolites** or **Markers** (including elevated quantities of endogenous substances) or evidence of the Use of a Prohibited Method.

Anti-Doping Administrator:

The FITA Anti-Doping Administrator is a Person in charge of management and administration of anti-doping matters, who is nominated by the Executive Committee upon recommendation of the Executive Director.

Anti-Doping Organization:

A **Signatory** that is responsible for adopting rules for initiating, implementing or enforcing any part of the **Doping Control** process. This includes, for example, the International Olympic Committee, the International Paralympic Committee, and other **Major Event Organizations** that conduct **Testing** at their **Events**, **WADA**, International Federations, and **National Anti-Doping Organizations**.

Athlete: For purposes of Doping Control, any Person who participates in sport at the international level (as defined by each International Federation) or national level (as defined by each National Anti-Doping Organization) and any additional Person who participates in sport at a lower level if designated by the Person's National Anti-Doping Organization. For purposes of anti-doping information and education, any Person who participates in sport under the authority of any Signatory, government, or other sports organization accepting the Code.

Athlete Support Personnel:

Any coach, trainer, manager, agent, team staff, official, medical or para-medical personnel working with or treating Athletes participating in or preparing for sports competition.

Attempt: Purposely engaging in conduct that constitutes a substantial step in a course of conduct planned to culminate in the commission of an anti-doping rule violation. Provided, however, there shall be no anti-doping rule violation based solely on an Attempt to commit a violation IF the Person renounces the attempt prior to it being discovered by a third party not involved in the Attempt.

Code: The World Anti-Doping Code.

Competition:

A single race, match, game or singular athletic contest.

Consequences of Anti-Doping Rules Violations:

An **Athlete's** or other **Person's** violation of an anti-doping rule may result in one or more of the following: (a) **Disqualification** means the Athlete's results in a particular **Competition** or **Event** are invalidated, with all resulting consequences including forfeiture of any medals, points and prizes; (b) **Ineligibility** means the Athlete or other Person is barred for a specified period of time from participating in any Com-

petition or other activity or funding as provided in Article 10.9; [and (c) **Provisional Suspension** means the Athlete or other Person is barred temporarily from participating in any Competition prior to the final decision at a hearing conducted under Article 8 (Right to a Fair Hearing).]

Disqualification:

See **Consequences** of Anti-Doping Rules Violations above.

Doping Control:

The process including test distribution planning, **Sample** collection and handling, laboratory analysis, results management, hearings and appeals.

Event: A series of individual **Competitions** conducted together under one ruling.

In-Competition:

For purposes of differentiating between **In-Competition** and **Out-of-Competition Testing**, unless provided otherwise in the rules of an International Federation or other relevant **Anti-Doping Organization**, an In-Competition test is a test where an Athlete is selected for testing in connection with a specific Competition.

For purposes of In-Competition testing, the competition starts the day after the opening ceremony or on the first day of competition whichever comes first and ends on the last day of the competion after the testing for that competition has been completed."

Independent Observer Program:

A team of observers, under the supervision of **WADA**, who observe the **Doping Control** process at certain **Events** and report on observations. IF WADA is testing **In-Competition** at an Event, the observers shall be supervised by an independent organization.

Ineligibility:

See **Consequences** of Anti-Doping Rules Violations above.

International Event:

An **Event** where the International Olympic Committee, the International Paralympic Committee, an International Federation, a **Major Event Organization**, or another international sport organization is the ruling body for the Event or appoints the technical officials for the Event.

FITA International Events are defined as follows:

- Competition for World and Continental titles,
- Competition for Olympic titles,
- Competition for World Ranking,
- Olympic Qualification Events (Continental Qualifying Tournaments),
- Archery events of Major Event Organizations,
- And any other *Event* for which FITA is the ruling body or appoints technical officials.

International-Level Athlete:

Athletes designated by one or more International Federations as being within the **Registered Testing Pool** for an International Federation.

International Standard:

A standard adopted by **WADA** in support of the **Code**. Compliance with an International Standard (as opposed to another alternative standard, practice or procedure) shall be sufficient to conclude that the procedures addressed by the International Standard were performed properly.

Major Event Organizations:

This term refers to the continental associations of **National Olympic Committees** and other international multi-sport organizations that function as the ruling body for any continental, regional or other **International Event**.

Marker: A compound, group of compounds or biological parameters that indicates the **Use of a Prohibited Substance** or **Prohibited Method**.

Member Association:

A national or regional entity which is a member of or is recognized by FITA as the entity governing archery in that nation or region.

Metabolite:

Any substance produced by a biotransformation process.

Minor: A natural **Person** who has not reached the age of majority as established by the applicable laws of his or her country of residence.

National Anti-Doping Organization:

The entity(ies) designated by each country as possessing the primary authority and responsibility to adopt and implement anti-doping rules, direct the collection of **Samples**, the management of test results, and the conduct of hearings, all at the national level. IF this designation has not been made by the competent public authority(ies), the entity shall be the country's **National Olympic Committee** or its designee.

National Event:

A sport **Event** involving international or national-level Athletes that is not an **International Event**.

National Olympic Committee:

The organization recognized by the International Olympic Committee. The term **National Olympic Committee** shall also include the National Sport Confederation in those countries where the National Sport Confederation assumes typical National Olympic Committee responsibilities in the anti-doping area.

No Advance Notice:

A **Doping Control** which takes place with no advance warning to the **Athlete** and where the Athlete is continuously chaperoned from the moment of notification through **Sample** provision.

No Fault or Negligence:

The **Athlete**'s establishing that he or she did not know or suspect, and could not reasonably have known or suspected even with the exercise of utmost caution, that he or she had **Used** or been administered the **Prohibited Substance** or **Prohibited Method.**

No Significant Fault or Negligence:

The **Athlete**'s establishing that his or her fault or negligence, when viewed in the totality of the circumstances and taking into account the criteria for No Fault or Negligence, was not significant in relationship to the anti-doping rule violation.

Out-of-Competition:

Any **Doping Control** which is not **In-Competition**.

Participant:

Any **Athlete** or **Athlete Support Personnel**.

Person: A natural **Person** or an organization or other entity.

Possession:

The actual, physical possession, or the constructive possession (which shall be found only IF the person has exclusive control over the **Prohibited Substance/Method** or the premises in which a Prohibited Substance/Method exists); provided, however, that IF the person does not have exclusive control over the Prohibited Substance/Method or the premises in which a Prohibited Substance/Method exists, constructive possession shall only be found if the person knew about the presence of the Prohibited Substance/Method and intended to exercise control over it. Provided, however, there shall be no anti-doping rule violation based solely on possession IF, prior to receiving notification of any kind that the Person has committed an anti-doping rule violation, the Person has taken concrete action demonstrating that the Person no longer intends to have Possession and has renounced the **Person**'s previous Possession.

Prohibited List:

The List identifying the **Prohibited Substances** and **Prohibited Methods.**

Prohibited Method:

Any method so described on the **Prohibited List**.

Prohibited Substance:

Any substance so described on the **Prohibited List**.

Provisional Hearing:

For purposes of Article 7.5, an expedited abbreviated hearing occurring prior to a hearing under Article 8 (Right to a Fair Hearing) that provides the *Athlete* with notice and an opportunity to be heard in either written or oral form.

Provisional Suspension:

See **Consequences** above.

Publicly Disclose or Publicly Report:

To disseminate or distribute information to the general public or persons beyond those persons entitled to earlier notification in accordance with Article 14.

Registered Testing Pool:

The pool of top level **Athletes** established separately by each International Federation and **National Anti-Doping Organization** who are subject to both **In-Competition** and **Out-of-Competition Testing** as part of that International Federation's or Organization's test distribution plan.

Sample/Specimen:

Any biological material collected for the purposes of **Doping Control**.

Signatories:

Those entities signing the **Code** and agreeing to comply with the Code, including the International Olympic Committee, International Federations, International Paralympic Committee, **National Olympic Committees**, National Paralympic Committees, **Major Event Organizations**, **National Anti-Doping Organizations**, and **WADA**.

Tampering:

Altering for an improper purpose or in an improper way; bringing improper influence to bear; interfering improperly to alter results or prevent normal procedures from occurring.

Target Testing:

Selection of **Athletes** for **Testing** where specific Athletes or groups of Athletes are selected on a non-random basis for Testing at a specified time.

Team Sport:

A sport in which the substitution of **Athletes** is permitted during a **Competition**.

Testing: The parts of the **Doping Control** process involving test distribution planning, **Sample** collection, Sample handling, and Sample transport to the laboratory.

Trafficking:

To sell, give, administer, transport, send, deliver or distribute a **Prohibited Substance** or **Prohibited Method** to an **Athlete** either directly or through one or more third parties, but excluding the sale or distribution (by medical personnel or by **Persons** other than an **Athlete's Support Personnel**) of a Prohibited Substance for genuine and legal therapeutic purposes.

Use: The application, ingestion, injection or consumption by any means whatsoever of any **Prohibited Substance** or **Prohibited Method**.

WADA: The World Anti-Doping Agency.

20 FITA ANTI-DOPING AGREEMENT

I, as a member of a Member Association of FITA or participating in a FITA authorized or recognized event, hereby acknowledge and agree as follows:

1. I have received information on the FITA Anti-Doping Rules and had an opportunity to review them.

2. I consent and agree to comply with and be bound by all of the provisions of the FITA Anti-Doping Rules, including but not limited to, all amendments to the Anti-Doping Rules* and all International Standards* incorporated in the Anti-Doping Rules.

3 I acknowledge and agree that FITA and its Member Associations have jurisdiction to impose sanctions as provided in the FITA Anti-Doping Rules.

4 I also acknowledge and agree that any dispute arising out of a decision made pursuant to the FITA Anti-Doping Rules, after exhaustion of the process expressly provided for in the FITA Anti-Doping Rules, may be appealed exclusively as provided in Article 13 of the FITA Anti-Doping Rules to an appellate body for final and binding arbitration, which in the case of International-Level Athletes is the Court of Arbitration for Sport.

5. I acknowledge and agree that the decisions of the arbitral appellate body referenced above shall be final and enforceable, and that I will not bring any claim, arbitration, lawsuit or litigation in any other court or tribunal.

6. I have read and understood this Acknowledgement and Agreement.

_____	_____
Date	Print Name (Last Name, First Name)
_____	_____
Date of Birth (Day/Month/Year)	Signature (or, if a minor, signature of legal guardian)

*For the FITA Anti-Doping Rules and the International Standards in effect see: www.archery.org and/or www.wada-ama.org

21 DOPING CONTROL STATION - LAYOUT

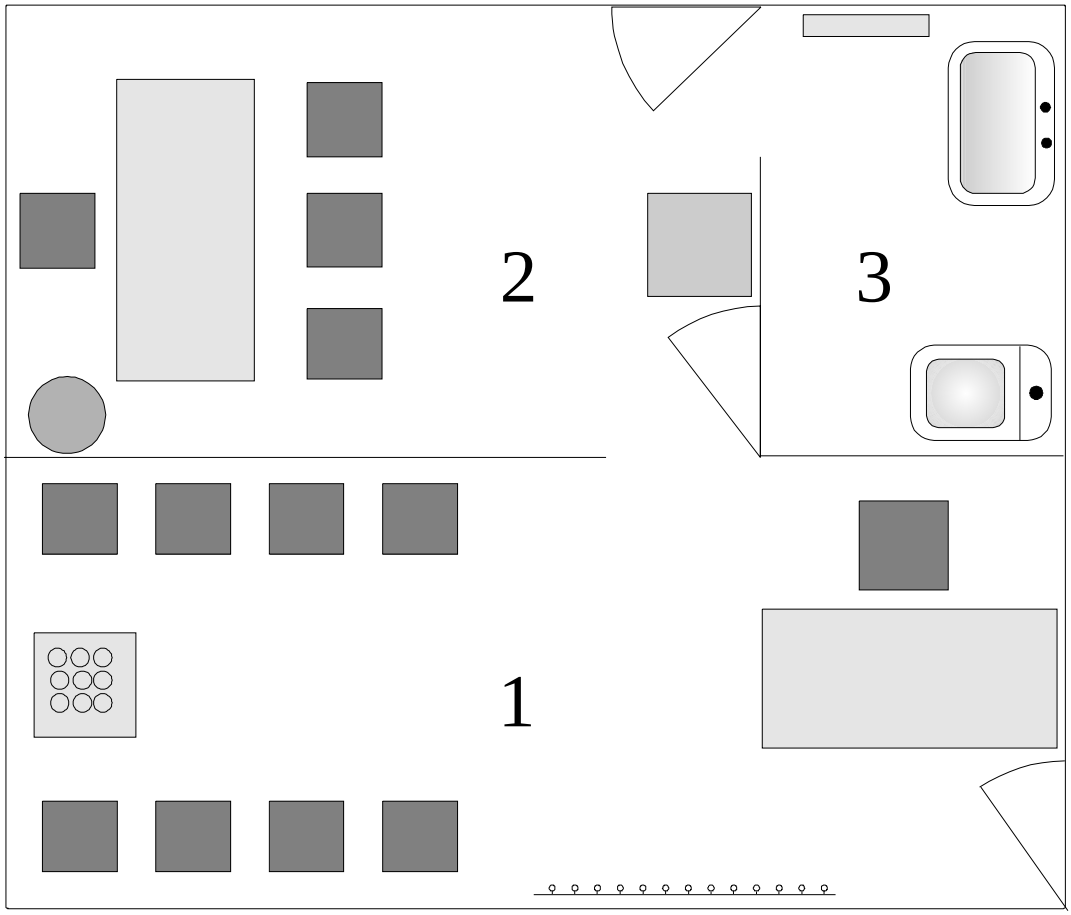

1. Waiting Room

- *Refrigerator or Cool Box with Sealed non-alcoholic drinks*
- *Desk*
- *Chairs*
- *Hangers*
- *Information No 1*

2. Consulting Room

- *Desk*
- *Chairs*
- *Waste Bin*
- *Refrigerator (Sampling storage)*
- *Telephone or other Communication Device*
- *Scissors*
- *Writing Material*
- *Paper Towels*
- *Disposable gloves*
- *Information No 2; 3; 4 on the entrance door*

3. Sampling Room (Toilet)

- *Water Closet*
- *Wash Basin*
- *Paper Towels*
- *Hygienic Toilet Paper*
- *Hooks*
- *Information No 5 on the door*

22 DOPING CONTROL INFORMATION 1 - 5

Information 1

**PLEASE HELP YOURSELF TO A DRINK
ONLY DRINK FROM AN ORIGINALLY
SEALED BOTTLE OR CAN**

Information 2

**NO ONE, INCLUDING THE PRESS, IS ALLOWED
TO ENTER THE DOPING CONTROL CENTER
DURING WORKING HOURS, EXCEPT ATHLETES,
ACCOMPANYING PERSONS, INTERPRETERS,
THE DOPING CONTROL PERSONNEL AND
INDEPENDENT OBSERVERS**

Information 3

**PLEASE CHOOSE YOURSELF A SEALED PLASTIC
CONTAINER FOR YOUR URINE SAMPLE**

Information 4

**PLEASE CHOOSE YOURSELF
ONE OF THE SET OF
URINE SAMPLE BOTTLES**

Information 5

**DURING DOPING CONTROL URINATION
THE ATHLETE MUST BE ACCOMPANIED BY A DOPING
CONTROL ESCORT OF THE SAME GENDER**

23.1TUE (Standard 1)

Application No: .....
(FITA office use only)

THERAPEUTIC USE EXEMPTIONS

Standard Application Form

I apply for approval from FITA for the therapeutic use of a prohibited substance on the WADA List of Prohibited Substances and Prohibited Methods.

Please complete all sections except part 7

1. Athlete Information

Surname: ..... Given Names:.....

Female ❑ Male ❑ (*tick appropriate box*)

Address: ....

City: .....Country: ..... Postal code: ....

Date of Birth (d/m/y): .....

Tel. Work: .....Tel. Home: .....Mobile: .....

E-mail: ..... Fax: ....

Sport: ..... Discipline/Position: .....

Member Association: .....

If athlete with disability, indicate disability: ....

2 Notifying medical practitioner

Name, qualifications and medical speciality *(see note 1)*: .....

.....

.....

Address: .....

..... E-mail address: .....

Tel. Work: ....Tel. Home: .....

Mobile: .....Fax: .....

*Diagnosis *(see note 2):* .....

.....

Has the Member Association's Chief Medical Officer been notified of this request? Yes: ❑ No:❑

Name of MA's Chief Medical Officer *(see note 3)*: .....

23.1 TUE (Standard 2)

Application No: .....
(FITA office use only)

3. Medication details (see note 4)

Prohibited Substance(s):	Dose of administration	Route of administration	Frequency of administration
1.			
2.			
3.			

Anticipated duration of this medication plan	

Previous / Current TUE request(s): ❑ yes ❑ no

If yes: Date: .....

Anti-Doping Organization:.....

Result (*attach previous TUE(s)*): .....

If appropriate, reasons for not prescribing alternative therapies (*see note 5)*: .....

.....

.....

.....

4. Additional information

Please note additional information and attach sufficient medical information to substantiate the diagnosis and the necessity to use a prohibited substance:

.....

.....

.....

.....

.....

23.1 TUE (Standard 3)

Application No: .....
(FITA office use only)

5 Medical practitioner's and athlete's declaration

I, ... certify the above-mentioned substance/s for the above-named athlete has been/are to be administered as the correct treatment for the above-named medical condition.

Signature of Medical Practitioner: ..... Date: .....

I, ……. certify that the information under 1. is accurate and that I am requesting approval to use a Substance or Method from the WADA Prohibited List. I authorize the release of personal medical information to the Anti-Doping Organization as well as to WADA staff and to the WADA TUEC (Therapeutic Use Exemption Committee) under the provisions of the Code. I understand that if I ever wish to revoke the right of the Anti-Doping Organization TUEC or WADA TUEC to obtain my health information on my behalf, I must notify my medical practitioner in writing of that fact.

Athlete's signature: ..... **Date:** .....

Parent's/Guardian's signature: ..... Date: .....
(if the athlete is a minor or has a disability preventing him/her to sign this form, a parent or guardian shall sign together with or on behalf of the athlete)

6. Notes:

Note 1	**Name, qualifications and medical specialty** For example: Dr AB Cook, MD FRACP, Gastro-enterologist**.**
Note 2	**Diagnosis** *Evidence confirming the diagnosis must be attached and forwarded with this application. The medical evidence should include a comprehensive medical history and the results of all relevant examinations, laboratory investigations and imaging studies. Copies of the original reports or letters should be included when possible. Evidence should be as objective as possible in the clinical circumstances and in the case of non-demonstrable conditions independent supporting medical opinion will assist this application.*
Note 3	**MA's Chief Medical Officer** *Where possible the Chief Medical Officer (CMO) of the sport involved should be notified of the application to the Anti-Doping Organization. When appropriate, the application should include a statement by the Medical Officer of the Athlete's national sport governing body, attesting to the necessity of the otherwise Prohibited Substance or Prohibited Method in the treatment of the athlete.*
Note 4	**Medication details** *Provide details concerning all prohibited substances or methods for which approval is sought. Use generic names (INN) and specify medication dose.*
Note 5	*If a permitted medication can be used in the treatment of the athlete's medical condition, please provide clinical justification for the requested use of the prohibited medication.*

Incomplete Applications will be returned and will need to be resubmitted.

23.1 TUE (Standard 4)

Application No: .....
(FITA office use only)

Please submit the completed form to:

FITA – Attn Anti-Doping Administrator
Avenue de Cour 135
1007 Lausanne
Switzerland

and keep a copy of the completed form for your records.

7. TUEC Decision (for FITA office use only)

Date Received:

Application Complete: ❑ yes ❑ no

Office Notes: ....
.....
.....
.....

Name of TUEC Representative(s): .....
.....

Signature(s): .....
.....

Date: .

23.2 TUE (Abbreviated 1+2)

Application No: .....:
(FITA office use only)

THERAPEUTIC USE EXEMPTIONS

Abbreviated Process

(beta-2 agonists by inhalation, glucocorticosteroids by non-systemic routes)

I apply for approval from FITA for the therapeutic use of a prohibited substance on the WADA List of Prohibited Substances and Prohibited Methods that is subject to the Abbreviated Therapeutic Use Exemption Application Process.

Please complete all sections

1. Athlete Information

Surname: ..... Given Names: .....

Female ❑ Male ❑ (*tick appropriate box*)

Address: .. ..

City: .....Country : ..... Postcode:.....

Date of Birth (d/m/y):

Tel. Work: .....Tel. Home : ..... Mobile: .....

E-mail: ..... Fax: .....

Sport: ..... Discipline/Position: .....

Member Association: .....

If athlete with disability, indicate disability: .....

2. Notifying medical practitioner

Name, qualifications and medical speciality *(see note 1)*: .....

.....

Address: .....

..... E-mail address: .....

Tel. Work: ..... Tel. Home: .....

Mobile: ..... Fax: .....

3. Medical information

Diagnosis: .....

Medical examination(s)/test(s) performed: .....

.....

Prohibited substance(s):	Dose of administration	Route of administration	Frequency of administration
Anticipated duration of this medication plan			

Additional information

.....

.....

.....

4. Medical practitioner's and athlete's declaration

I, ... certify the above-mentioned substance/s for the above named athlete has been/are to be administered as the correct treatment for the above named medical condition. I further certify that the use of alternative medications not on the Prohibited List would be unsatisfactory for the treatment of the above named medical condition. Specify reasons:

.....

Signature of Medical Practitioner: ..... Date: .....

I, certify that the information under 1. is accurate and that I am requesting approval to use a Substance or Method from the WADA Prohibited List. I authorize the release of personal medical information to the Anti-Doping Organization as well as to WADA staff and to the WADA TUEC (Therapeutic Use Exemption Committee) as well as to other Anti-Doping Organizations under the provisions of the Code. I understand that if I ever wish to revoke the right of the Anti-Doping Organization TUEC or WADA TUEC to obtain my health information on my behalf, I must notify my medical practitioner in writing of that fact.

Athlete's signature: Date:.....

Parent's/Guardian's signature: ..... Date: .....

(if the athlete is a minor or has a disability preventing him/her to sign this form, a parent or guardian shall sign together with or on behalf of the athlete)

Incomplete Applications will be returned and will need to be resubmitted.

Please submit the completed form to: FITA – Attn Anti-Doping Administrator
Avenue de Cour 135
1007 Lausanne / Switzerland
(keep a copy of the completed form for your records).

23.3 TUE (Certificate of Approval)

FITA Approval No: .....

CERTIFICATE OF APPROVAL FOR THERAPEUTIC USE

The athlete has received approval for the use of the prohibited substance(s) listed below under the conditions stipulated in this document.

Athlete Details

Title: .....

Surname: ..... Given Names**:** ....

Date of Birth: ..... Sport: ....

Prohibited Substance(s): .....

Dose and method of administration: ***/*** .....

.....

.....

Duration of approval: .....

Approval expiry date .....

Any specific conditions attached to this approval: .....

.....

.....

.....

.....

<u>Attention athlete</u>: The dose, method and frequency of administration as prescribed by your physician have to be followed meticulously!

Authorization by FITA:

Name: Pr./Dr. X

Signature: Date:

Phone number:

ATTENTION ATHLETE

Please carry a copy of this form with you at all times. This form should be presented to the doping control officer at the time of testing.

24.1 DOPING CONTROL / CONTROLE ANTIDOPAGE

Doping Control Notification

Notification de contrôle antidopage

Please print clearly when filling in this form / *Veuillez remplir ce formulaire en lettres majuscules*

EVENT:	Selection Criteria / *Critères de Sélection* RANDOM ☐ OBLIGATORY ☐

Surname /*Nom*	First name /*Prénom*
Country / *Pays* ☐☐☐	Accreditation No / *N° d'accréditation* ☐☐☐☐☐☐☐☐☐☐☐
Notification time / *Heure de notification* ☐☐ : ☐☐	Date / *Date* Day / *Jour* ☐☐ / Month / *Mois* ☐☐ / Year / *Année* 200_
Required Reporting time / *doit se presenter à* ☐☐ : ☐☐	Date / *Date* Day / *Jour* ☐☐ / Month / *Mois* ☐☐ / Year / *Année* 200_
Escort Name / *Nom de L'accompagnateur*	Accreditation No / *N° d'accréditation* ☐☐☐☐☐☐☐☐☐☐☐

You have been selected for doping control. You are required to report to the Doping Control Station no later than one hour after receipt of this notification. You may be accompanied by one person. Failure to report for doping control within the given time limit and/or refusal to provide a sample may result in a sanction.
Vous avez été désigné pour un contrôle antidopage. Veuillez vous présenter au poste de contrôle antidopage dans l'heure qui suit la réception de cette notification. Vous pouvez vous faire accompagner d'une personne accréditée. Votre non-présentation dans les délais impartis ou votre refus de fournir l'échantillon demandé pourra entraîner des sanctions.
By signing this Doping control Notification you confirm that you have been notified of your selection and agree to appear as specified above.
Votre signature a valeur d'accusé-réception de cette notification et confirme que vous êtes disposé à vous présenter au contrôle antidopage comme indiqué cu-dessus.

Signature Athlete / *Signature du Concurrent*

I hereby confirm that I have notified the athlete of his/her selection for doping control / *Je confirme avoir notifié le concurrent de sa selection pour un contrôle antidopage*

Signature Escort / *Signature de l'accompagnateur*

Actual Reporting time / *s'est presenté à* ☐☐ : ☐☐	Date / *Date* Day / *Jour* ☐☐ / Month / *Mois* ☐☐ / Year / *Année* 200_
☐ The athlete refused to sign the notification / *Le concurrent a refusé de signer la présente notification*	
☐ The athlete arrived after the required reporting time without approval / *Le concurrent est arrive après les délais impartis sans autorisation*	
Arrival time / *Heure d'arrivée* ☐☐ : ☐☐	Date / *Date* Day / *Jour* ☐☐ / Month / *Mois* ☐☐ / Year / *Année* 200_
☐ The athlete failed to appear for the doping control / *Le concurrent ne s'est pas présenté au contrôle antidopage*	
Name Lead doping Control Officer / *nom de l'agent principal de contrôle antidopage*	Accreditation No / *N° d'accréditation* ☐☐☐☐☐☐☐☐☐☐☐
Signature Lead Doping Control Officer / *agent principal de contrôle antidopage*	Signature FITA MC Representative / *Représentant de la CM FITA*

24.2 Doping Control Official Record

Procès-verbal de contrôle antidopage

Please print clearly when filling in this form / *Veuillez remplir ce formulaire en lettres majuscules*

Surname / *Nom*	First name / *Prénom*
Country /Pays	Accreditation No / *N° d'accréditation*
Sport	Gender / *Sexe* ☐ Male / *Masculin* ☐ Female / *Féminin*

PARTIAL SAMPLE / *ECHANTILLON PARTIEL*

Time Sample Collected / *Heure de production de l'échantillon*	☐☐ : ☐☐	Date / *Date* ☐☐ / ☐☐ / 200__	Signature Witnessing DCO / *Agent de contrôle antidopage présent*
Total volume / Volume total	☐☐☐	Sample Code No / *N° de code de l'échantillon* A/B ☐☐☐☐☐☐	Partial Seal No / *N° de sceau partiel* ☐☐☐☐☐☐
Signature Athlete / *Signature du concurrent*		Signature DCO / *de l'agent de contrôle antidopage*	
Time Sample Collected / *Heure de production de l'échantillon*	☐☐ : ☐☐	Date / *Date* ☐☐ / ☐☐ / 200__	Signature Witnessing DCO / *Agent de contrôle antidopage présent*
Total volume / *Volume total*	☐☐☐	Sample Code No / *N° de code de l'échantillon* A/B ☐☐☐☐☐☐	Partial Seal No / *N° de sceau partiel* ☐☐☐☐☐☐
Signature Athlete / *Signature du concurrent*		Signature DCO / *de l'agent de contrôle antidopage*	

Time Sample collected / *Heure de production de l'échantillon* ☐☐ ☐☐	Date / *Date* ☐☐ ☐☐ / 200_
Sample Code N0 / *N° de code de l'échantillon* **A/B** ☐☐☐☐☐☐	pH Reading / *Lecture du pH* ☐.☐ Specific Gravity / *Poids spécifique* **1.0** ☐☐

Medication taken during the last three days / *medicaments pris au cours des trois derniers jours*

Name of Medication / *Nom du/des médicaments*	Date last taken *Dernière prise*	Dosage *Dose*	Name of Medication / *Nom du/des médicaments*	Date last taken *dernière prise*	Dosage *Dose*

Comments / *Remarques*

All samples will be sent to the WADA accredited Laboratory. / *Tous les échantillons seront remis au laboratoire accrédité par l'AMA.*

Minor irregularities which cannot reasonably be considered to have affected the results of otherwise valid tests shall have no effect on such results. / *Des irregularities mineures n'ayant pas fauss´´e les résultats de contrôles valables seront tolérées.*

The undersigned hereby declare that the information on this form is complete and accurate. / *Je declare que les renseignements indiqués sur ce formulaire sont complets et exacts.*

Signature Athlete / *Signature du concurrent*	Signature accompanying person / *Signature de l'accompagnateur*	Signature FITA MC representative / *Signature du représentant de la CM FITA*
Name Doping Control Officer (DCO) / *Nom de l'agent de contrôle antidopage (ACA)*	Signature Doping Control Officer / *Signature de l'agent de contrôle antidopage (ACA)*	

Blue copy: FITA MC / *Feuillet bleu: CM FITA*
Pink copy: Athlete / *Feuillet rose: Concurrent*
Yellow copy: Laboratory / *Feuillet jaune: Laboratoire*

25 DOPING CONTROL TRANSPORT FORM

DOPING CONTROL TRANSPORT FORM / *FICHE DE TRANSPORT DE CONTROLE ANTIDOPAGE*

DEPARTURE / *DÉPART*

From venue :

To WADA Laboratory in:

Departure Date / *Date* de départ M/*M* M/*M* D/*J* D/*J* Y/*A* Y/*A* Departure time / *Heure de départ*

Serial No of sealed container with 'A' and 'B' Bottles :

1.....	16.....	31.....
2.....	17.....	32.....
3.....	18.....	33.....
4.....	19.....	34.....
5.....	20.....	35.....
6.....	21.....	36.....
7.....	22.....	37.....
8.....	23.....	38.....
9.....	24.....	39.....
10.....	25.....	40.....
11.....	26.....	41.....
12.....	27.....	42.....
13.....	28.....	43.....
14.....	29.....	44.....
15.....	30.....	45.....

ARRIVAL / *ARRIVÉE*

Arrival Date: / *Date d'arrivée* M/*M* M/*M* D/*J* D/*J* Y/*A* Y/*A* Arrival time: / *Heure d'arrivée* :

WADA Laboratory in:

Number of sealed containers with 'A' and 'B' Bottles: ……..

Signature of WADA Laboratory representative / *représentant du laboratoire AMA*

Signature Courier /*coursier*

26 DOPING CONTROL ALCOHOL TEST FORM

DOPING CONTROL ALCOHOL TEST FORM

NOTIFICATION

Name:	Surname:	ID No:
Country/Team:	Notification Date: ☐☐ ☐☐ 200_ Notification Time: ☐☐ : ☐☐	Event:

You have been selected for an alcohol test and are required to report to the Doping Control Station no later than 1 hour
At this test a breath sample will be collected under supervision. Failure to report for the test or to provide a sample may result in disqualification. You may be accompanied by an official (e.g. Team Official or Doctor)

Signature of Doping Control Officer: ..... printed: ☐

I acknowledge the receipt of this notice and agree to attend no later than the time indicated above.

Signature of the Athlete: .....

TO BE COMPLETED AT THE DOPING CONTROL CENTER

Date of Sample: ☐☐ ☐☐ 200-	Time of arrival at Station: ☐☐ : ☐☐
Alcometer No: .....…….....……..... 1st Reading: ☐ , ☐☐ promille	Alcometer No: .....…….... 2nd Reading: ☐ , ☐☐ promille

Declaration of Medication and Drugs taken in the last week

Name:	Dosage:	Last taken:	Comments:

Comments: .....
.....

I declare that I am satisfied with the sample taking procedure. I acknowledge the receipt of the athlete's copy of the Doping control Collection Form.

Signature of the Athlete: .....…….....

I certify that the alcometer readings above relate to the breath samples provided by the athlete named above..... ☐
The athlete did not report for the breath test: ..... ☐
The athlete refused to provide a breath sample: ..... ☐

Signature of Doping Control Officer: .....

I certify the above information to be correct:

....
Signature of International Representative (if present) Signature of Accompanying Official (if present)

APPENDIX 6

GUIDELINES FOR FITA PLAQUETTES (see article 1.22)

1. FITA awards Plaquettes in the following circumstances:

BRONZE

1. Council Members on retirement;
2. Chairmen of Permanent Committees on retirement;
3. International Judges having served at FITA Championships or Olympic Games on retirement;
4. Organizers of successful Continental Championships;
5. Organizers of major international competitions regularly held over many years;
6. Experts on Development and Technical Assistance or Olympic Solidarity missions having served regularly and successfully;
7. Persons having in any way served FITA long, loyally and successfully;
8. Persons having substantially contributed by their work to promote the image of FITA.

SILVER

1. Vice Presidents on retirement;
2. Council Members with particular merits on retirement;
3. Organizers of successful World Championships or Olympic Tournaments;
4. Technical Delegates at Olympic Tournaments.
5. FITA Officers with particular merits and having served FITA long and successfully

GOLD

1. Presidents on retirement;
2. Other Officers having served more than three terms of office on retirement.
3. FITA Officers for their long and outstanding services to FITA

The above Guidelines were adopted by Council at a meeting held 28-29 January, 1989 in Lausanne, Switzerland and updated in the Council meeting held 29-30 January, 1999. They will not be taken as automatic criteria and Council will review every case proposed checking its correspondence to the Guidelines. Council will also update these Guidelines, if and when, the need arises.

APPENDIX 7

Since this appendix is based on the Olympic Charter which is changed in between Congresses of FITA this appendix will be considered as a bylaw to the FITA Constitution knowing that Council and Congress are in this respect bound to the decisions of the IOC and that changes will only be able to be made by the IOC and not the FITA Congress.

OLYMPIC CHARTER RULE 45
ELIGIBILITY CODE

(From the Olympic Charter 2003 Edition)

To be eligible for participation in the Olympic Games, a competitor, coach, trainer or official must comply with the Olympic Charter as well as with the rules of the International Federation concerned as approved by the International Olympic Committee and the athlete, coach or trainer must be entered by his National Olympic Committee. The above noted persons must must notably:

- Respect the spirit of fair play and non violence, and behave accordingly on the sportsfield;
- Respect and comply in all aspects with the World Anti-Doping Code.

BYE-LAW TO RULE 45

1. Each International Federation establishes its sport's own eligibility criteria in accordance with the Olympic Charter. Such criteria must be submitted to the International Olympic Committee Board for approval.
2. The application of the eligibility criteria lies with the International Federations, their affiliated national federations and the National Olympic Committees in the fields of their respective responsibilities.
3. Except as permitted by the IOC Executive Board, no athlete, coach, trainer or official who participate in the Olympic Games may allow his person, name, picture or sports performances to be used for advertising purposes during the Olympic Games.
4. The entry or participation of an athlete in the Olympic games shall not be conditional on any financial consideration.

OLYMPIC CHARTER RULE 61
PROPAGANDA AND ADVERTISING

(From the Olympic Charter 2003 Edition)

1. No kind of demonstration or political, religious or racial propaganda is permitted in the Olympic areas.

   No form of publicity shall be allowed in and above the stadia and other competition areas which are considered as part of the Olympic sites.

   Commercial installations and advertising signs shall not be allowed in the stadia, nor in the other sports grounds.

2. The IOC Executive Board alone has the competence to determine the principles and conditions under which any form of publicity may be authorized.

BYE-LAW TO RULE 61

1. No form of publicity or propaganda, commercial or otherwise, may appear on sportswear, accessories or, more generally, on any article of clothing or equipment whatsoever worn or used by the athletes or other participants in the Olympic Games, except for the identification - as defined in paragraph 8 below - of the manufacturer of the article or equipment concerned, provided that such identification shall not be marked conspicuously for advertising purposes.

   Outline criteria are given below:

   1.1 The identification of the manufacturer shall not appear more than once per item of clothing or equipment.

   1.2 Equipment: any manufacturer identification that is greater than 10% of the surface area of the equipment that is exposed during competition shall be deemed to be marked conspicuously. However, there shall be no manufacturer identification greater than 60 cm^2.

   1.3 Headgear (e.g. hats, helmets, sunglasses, goggles) and gloves: Any identification of manufacturer over 6 cm^2 shall be deemed to be marked conspicuously.

   1.4 Clothing: (e.g. T-shirts, shorts, sweat tops and sweat pants) Manufacturer identification which is greater than 12 cm^2 shall be deemed to be marked conspicuously.

   1.5 Shoes: it is acceptable that there appear the normal distinctive design pattern of the manufacturer. The manufacturer's name and/or logo may also appear, up to a maximum of 6 cm^2, either as part of the normal distinctive design pattern or independent of the normal distinctive design pattern.

1.6 In case of special rules established by an International Sports Federation, exceptions to the rules mentioned above can be approved by the Executive Board of the IOC.

Any violations of the provisions of the present clause shall result in disqualification or the withdrawal of accreditation of the person concerned. The decisions of the IOC Executive Board regarding this matter shall be final.

The numbers worn by athletes may not display publicity of any kind and must bear the Olympic emblem of the OCOG.

2. To be valid, all contracts of the OCOG containing any element whatsoever of advertising, including the right or license to use the emblem or the mascot of the Olympic Games, must be in conformity with the Olympic Charter and must comply with the instructions given by the IOC Executive Board. The same shall apply to contracts relating to the timing equipment, the scoreboards, and to the injection of any identification signal in television programs. Breaches of these regulations come under the authority of the IOC Executive Board.

3. Any mascot created for the Olympic Games shall be considered to be an Olympic emblem, the design of which must be submitted by the OCOG to the IOC Executive Board for its approval. Such mascot may not be used for commercial purposes in the country of an NOC without the latter's prior written approval.

4. The OCOG shall ensure the protection of the property of the emblem and the mascot of the Olympic Games for the benefit of the IOC, both nationally and internationally. However, the OCOG alone and, after the OCOG has wound up, the NOC of the host country, may exploit such emblem and mascot, as well as other marks, designs, badges, posters, objects and documents connected with the Olympic Games during their preparation, during their holding and during a period terminating not later than the end of the calendar year during which such Olympic Games are held. Upon the expiry of this period, all rights in or relating to such emblem, mascot and other marks, designs, badges, posters, objects and documents shall thereafter belong entirely to the IOC. The OCOC and/ or the NOC, as the case may be and to the extent necessary, shall act as trustees (in a fiduciary capacity) for the sole benefit of the IOC in this respect.

5. The provisions of this bye-law also apply, *mutatis mutandis,* to all contracts signed by the organizing committee of an IOC Session or an Olympic Congress.

6. The uniforms of the athletes and of all persons holding an official position may include the flag or their NOC Olympic emblem or, with the consent of the OCOG, the OCOG Olympic emblem. The IF officials may wear the uniform and the emblem of their federations.

7. The identification on all technical gear, installations and other apparatus, which are neither worn nor used by athletes or other participants at the Olympic Games, including timing equipment and scoreboards, may on no account be larger than 1/10 th of the height of the equipment, installation or apparatus in question, and shall not be greater than 10 centimeters high.

8. The word "identification" means the normal display of the name, designation, trademark, logo or any other distinctive sign of the manufacturer of the item, appearing not more than once per item.

ARCHERY EXEMPTION

The permitted exception to paragraph 1.1 of the By-Law to Rule 61 for archery is that the manufacturer's identification can appear on the bow (on the handle and on each limb on both sides) and the stabilizers.

APPENDIX 8

1. JUNIOR OUTDOOR TARGET ARCHERY WORLD CHAMPIONSHIP - PRELIMINARY ENTRY FORM

The Organizers' own headed paper
(Name, Event, Date, Venue, Address, Emblem may all be used as desired)

PRELIMINARY ENTRY FORM / FORMULE PRELIMINAIRE DE PARTICIPATION

RETURN TO / RENVOYER A**: FITA**, Avenue de Cour 135, CH 1007 Lausanne, Switzerland,
Fax +41 21 614 30 55 E-mail /adresse couriel: info@archery.org

RETURN AT THE LATEST / RENVOYER AU PLUS TARD: (60 days before the 1st day of the competition)
(60 jours avant le premier jour de la compétition)

Preliminary Entries received after that deadline will be refused /
Les inscriptions reçues après cette date seront refusées

NAME OF MEMBER ASSOCIATION / NOM DE L'ASSOCIATION MEMBRE

NUMBER OF ATHLETES / NOMBRE DE COMPETITEURS (max 4 per class and per division)

	JUNIOR WOMEN / JUNIORS DAMES:	JUNIOR MEN / JUNIORS HOMMES:
Recurve/Classique :	☐	☐
Compound	☐	☐
	Born in 19….. or younger (after 31/12/….)	Né(e)s en 19 …. Ou plus jeunes (après le 31/12/….

	CADET WOMEN / CADETTES:	CADET MEN / CADETS:
Recurve/Classique :	☐	☐
Compound	☐	☐
	Born in 19….. or younger (after 31/12/….)	Né(e)s en 19 …. Ou plus jeunes (après le 31/12/….

NUMBER OF OFFICIALS / NOMBRE D'OFFICIELS ET D'ACCOMPAGNANTS (maximum : 4)

☐

(Art 3.15.1.2, in case of more than 4, only these 4 will be given competition field access / / s'il y a plus de 4 accompagnants: seules les 4 personnes mentionnées ci-dessus seront admises sur le terrain)

I hereby declare that our Member Association is in good standing and that all athletes and officials are covered in case of illness or accident and have signed the FITA Anti-Doping Agreement.
Je déclare que l'association membre est en situation financière saine et que l'ensemble des frais liés aux concurrents et aux officiels sont entièrement couverts ainsi qu' en cas de maladie ou d'accident. Tous ont signé l'accord FITA Antidopage.

Date: _____ Signature: _____

President / Président
Secretary / Secrétaire

2. OUTDOOR TARGET ARCHERY WORLD CHAMPIONSHIP - PRELIMINARY ENTRY FORM

The Organizers' own headed paper
(Name, Event, Date, Venue, Address, Emblem may all be used as desired)

PRELIMINARY ENTRY FORM / FORMULE PRELIMINAIRE DE PARTICIPATION

RETURN TO / RENVOYER A**: FITA**, Avenue de Cour 135, CH 1007 Lausanne, Switzerland,
Fax +41 21 614 30 55 E-mail /adresse couriel: info@archery.org

Return at the latest / Renvoyer au plus tard: (60 days before the 1st day of the competition)
(60 jours avant le premier jour de la compétition)
Preliminary Entries received after that deadline will be refused /
Les inscriptions reçues après cette date seront refusées

NAME OF MEMBER ASSOCIATION / NOM DE L'ASSOCIATION MEMBRE

NUMBER OF ATHLETES / NOMBRE DE COMPETITEURS (max 4 per class and per division)

	WOMEN / DAMES:	MEN / MESSIEURS:
Recurve/Classique :		
Compound		

NUMBER OF OFFICIALS / NOMBRE D'OFFICIELS ET D'ACCOMPAGNANTS (maximum : 4)

(Art 3.15.1.2, in case of more than 4, only these 4 will be given competition field access / / s'il y a plus de 4 accompagnants: seules les 4 personnes mentionnées ci-dessus seront admises sur le terrain)

I hereby declare that our Member Association is in good standing and that all athletes and officials are covered in case of illness or accident and have signed the FITA Anti-Doping Agreement.
Je déclare que l'association membre est en situation financière saine et que l'ensemble des frais liés aux concurrents et aux officiels sont entièrement couverts ainsi qu' en cas de maladie ou d'accident. Tous ont signé l'accord FITA Antidopage.

Date: _____ Signature: _____

President / Président
Secretary / Secrétaire

3. JUNIOR OUTDOOR TARGET ARCHERY WORLD CHAMPIONSHIP - ENTRY FORM (SAMPLE)

FINAL ENTRY FORM / FORMULAIRE DEFINITIF DE PARTICIPATION

Return to / A renvoyer à: **FITA**, Avenue de Cour 135, CH1007 Lausanne, Switzerland, Fax +41 21 614 30 55,
E-mail / adresse courriel *:* info@archery.org
Return at the latest / A renvoyer au plus tard le: (20 days before the 1st day of the competition
(20 jours avant le premier jour de la compétition):
Entries received after that date will be refused. / Les inscriptions reçues après cette date seront refusées

NAME OF MEMBER ASSOCIATION / NOM DE L'ASSOCIATION MEMBRE

LIST OF ATHLETES / LISTE NOMINATIVE DE TOUS LES COMPETITEURS
(max. 4 in each category / 4 maximum dans chaque catégorie)
Please send an ID Picture of each person to be accredited. / Veuillez envoyer une photo d'identité de toutes les personnes à accréditer auprès de la FITA..

Recurve / "arc classique"

Junior Women / Juniors Dames
Last name / nom de famille First name / prénom
Birthdate/Date de naissance (born after 31/12/….)

1._____
DD/MM/YYYY: ___ ____ _____

2._____
DD/MM/YYYY: ___ ____ _____

3._____
DD/MM/YYYY: ___ ____ _____

4._____
DD/MM/YYYY: ___ ____ _____

Junior Men / Juniors Hommes
Last name / nom de famille First name / prénom
Birthdate/Date de naissance(nés après le 31/12/….)

1. _____
DD/MM/YYYY: ___ ____ _____

2. _____
DD/MM/YYYY: ___ ____ _____

3. _____
DD/MM/YYYY: ___ ____ _____

4. _____
DD/MM/YYYY: ___ ____ _____

Compound / "arc compound"

Junior Women / *Juniors Dames*
Last name / nom de famille First name / prénom
Birthdate/Date de naissance (born after 31/12/….)

1._____
DD/MM/YYYY: ___ ____ _____

2._____
DD/MM/YYYY: ___ ____ _____

3._____
DD/MM/YYYY: ___ ____ _____

4._____
DD/MM/YYYY: ___ ____ _____

Junior Men / Juniors Hommes
Last name / nom de famille First name / prénom
Birthdate/Date de naissance(nés après le 31/12/….)

1. _____
DD/MM/YYYY: ___ ____ _____

2. _____
DD/MM/YYYY: ___ ____ _____

3. _____
DD/MM/YYYY: ___ ____ _____

4. _____
DD/MM/YYYY: ___ ____ _____

Recurve / "arc classique"

Cadet Women / Cadettes
Last name / nom de famille First name / prénom
Birthdate/Date de naissance (born after 31/12/….)

1._____
DD/MM/YYYY: ___ ____ _____

2._____
DD/MM/YYYY: ___ ____ _____

3._____
DD/MM/YYYY: ___ ____ _____

4._____
DD/MM/YYYY: ___ ____ _____

Cadet Men / Cadets
Last name / nom de famille First name / prénom
Birthdate/Date de naissance(nés après le 31/12/….)

1. _____
DD/MM/YYYY: ___ ____ _____

2. _____
DD/MM/YYYY: ___ ____ _____

3. _____
DD/MM/YYYY: ___ ____ _____

4. _____
DD/MM/YYYY: ___ ____ _____

Compound/"arc compound"

Cadet Women /Cadettes
Last name / nom de famille First name / prénom
Birthdate/Date de naissance (born after 31/12/….)

1._____
DD/MM/YYYY: ___ ____ _____

2._____
DD/MM/YYYY: ___ ____ _____

3._____
DD/MM/YYYY: ___ ____ _____

4._____
DD/MM/YYYY: ___ ____ _____

Cadet Men/ Cadets
Last name / nom de famille First name / prénom
Birthdate/Date de naissance(nés après le 31/12/….)

1. _____
DD/MM/YYYY: ___ ____ _____

2. _____
DD/MM/YYYY: ___ ____ _____

3. _____
DD/MM/YYYY: ___ ____ _____

4. _____
DD/MM/YYYY: ___ ____ _____

Team Captain / capitaine d'équipe 1. _____

Assistants and coaches / assistants et entraîneurs 2. _____

3. _____

maximum 4 4. _____

(Art 3.15.1.2, in case of more than 4, only these 4 will be given competition field access /
s'il y a plus de 4 accompagnants: seules les 4 personnes mentionnées ci-dessus seront admises sur le terrain)

I hereby declare that our Member Association is in good standing and that all athletes and officials are covered in case of illness or accident and have signed the FITA Anti-Doping Agreement.
Je déclare que l'association membre est en situation financière saine et que l'ensemble des frais liés aux concurrents et aux officiels sont entièrement couverts ainsi qu' en cas de maladie ou d'accident. Tous ont signé l'accord FITA Antidopage.

Date: _____ Signature _____

President / Président
Secretary / Secrétaire

4. OUTDOOR TARGET ARCHERY WORLD CHAMPIONSHIP - ENTRY FORM (SAMPLE)

The Organizers'own headed paper
(Name, Event, Date, Venue, Address, Emblem may all be used as desired)

FINAL ENTRY FORM / FORMULAIRE DEFINITIf DE PARTICIPATION

Return to / A renvoyer à: **FITA**, Avenue de Cour 135, CH1007 Lausanne, Switzerland, Fax +41 21 614 30 55,
E-mail / adresse courriel *:* info@archery.org
Return at the latest / A renvoyer au plus tard le: (20 days before the 1st day of the competition
(20 jours avant le premier jour de la compétition):
Entries received after that date will be refused. / Les inscriptions reçues après cette date seront refusées

NAME OF MEMBER ASSOCIATION / NOM DE L'ASSOCIATION MEMBRE

LIST OF ATHLETES / LISTE NOMINATIVE DE TOUS LES COMPETITEURS
(max. 4 in each category / 4 maximum dans chaque catégorie)
Please send an ID Picture of each person to be accredited. / Veuillez envoyer une photo d'identité de toutes les personnes à accréditer auprès de la FITA..

Recurve/Classique

Women / Femmes Last name /nom de famille First name / prénom Birthdate/Date de naissance	Men/ Hommes Last name /nom de famille First name / prénom Birthdate/Date de naissance
1._____	1. _____
DD/MM/YYYY: ___ ____ _____	DD/MM/YYYY: ___ ____ _____
2._____	2. _____
DD/MM/YYYY: ___ ____ _____	DD/MM/YYYY: ___ ____ _____
3._____	3. _____
DD/MM/YYYY: ___ ____ _____	DD/MM/YYYY: ___ ____ _____
4._____	4. _____
DD/MM/YYYY: ___ ____ _____	DD/MM/YYYY: ___ ____ _____

Compound

Women / Femmes Last name /nom de famille First name / prénom Birthdate/Date de naissance	Men/ Hommes Last name /nom de famille First name / prénom Birthdate/Date de naissance
1._____	1. _____
DD/MM/YYYY: ___ ____ _____	DD/MM/YYYY: ___ ____ _____
2._____	2. _____
DD/MM/YYYY: ___ ____ _____	DD/MM/YYYY: ___ ____ _____
3._____	3. _____
DD/MM/YYYY: ___ ____ _____	DD/MM/YYYY: ___ ____ _____
4._____	4. _____
DD/MM/YYYY: ___ ____ _____	DD/MM/YYYY: ___ ____ _____

Team Captain / Capitaine d'équipe	1. _____	_____
Assistants and coaches	2. _____	_____
Assistants de capitaine d'équipe	3. _____	_____
maximum 4	4. _____	_____

(Art 3.15.1.2, in case of more than 4, only these 4 will be given competition field access /
s'il y a plus de 4 accompagnants: seules les 4 personnes mentionnées ci-dessus seront admises sur le terrain)

I hereby declare that our Member Association is in good standing and that all athletes and officials are covered in case of illness or accident and have signed the FITA Anti-Doping Agreement.
Je déclare que l'association membre est en situation financière saine et que l'ensemble des frais liés aux concurrents et aux officiels sont entièrement couverts ainsi qu' en cas de maladie ou d'accident. Tous ont signé l'accord FITA Antidopage.

Date: _____ Signature _____

President / Président
Secretary / Secrétaire

5. INDOOR TARGET ARCHERY WORLD CHAMPIONSHIP - PRELIMINARY ENTRY FORM

The Organizers' own headed paper
(Name, Event, Date, Venue, Address, Emblem may all be used as desired)

PRELIMINARY ENTRY FORM / FORMULE PRELIMINAIRE DE PARTICIPATION

RETURN TO / RENVOYER A: **FITA**, Avenue de Cour 135, CH 1007 Lausanne, Switzerland,
Fax +41 21 614 30 55 E-mail /adresse couriel: info@archery.org

Return at the latest / Renvoyer au plus tard: (60 days before the 1st day of the competition)
(60 jours avant le premier jour de la compétition)
Preliminary Entries received after that deadline will be refused /
Les inscriptions reçues après cette date seront refusées

NAME OF MEMBER ASSOCIATION / NOM DE L'ASSOCIATION MEMBRE

NUMBER OF ATHLETES / NOMBRE DE COMPETITEURS (max 3 per category / par catégorie)

	JUNIOR WOMEN / JUNIORS DAMES:	JUNIOR MEN / JUNIORS HOMMES:
Recurve/Classique :	☐	☐
Compound	☐	☐
Born in 19….. or younger (after 31/12/….)		Né(e)s en 19 …. Ou plus jeunes (après le 31/12/….

	WOMEN / DAMES:	MEN / HOMMES:
Recurve/Classique :	☐	☐
Compound	☐	☐

NUMBER OF OFFICIALS / NOMBRE D'OFFICIELS ET D'ACCOMPAGNANTS (maximum : 4)

☐

(Art 3.15.1.2, in case of more than 4, only these 4 will be given competition field access / /
s'il y a plus de 4 accompagnants: seules les 4 personnes mentionnées ci-dessus seront admises sur le terrain)

I hereby declare that our Member Association is in good standing and that all athletes and officials are covered in case of illness or accident and have signed the FITA Anti-Doping Agreement.
Je déclare que l'association membre est en situation financière saine et que l'ensemble des frais liés aux concurrents et aux officiels sont entièrement couverts ainsi qu' en cas de maladie ou d'accident. Tous ont signé l'accord FITA Antidopage.

Date: _____ Signature: _____

President / Président
Secretary / Secrétaire

6. INDOOR TARGET ARCHERY WORLD CHAMPIONSHIP - ENTRY FORM (SAMPLE)

FINAL ENTRY FORM / FORMULAIRE DEFINITIF DE PARTICIPATION

Return to / A renvoyer à: **FITA,** Avenue de Cour 135, CH1007 Lausanne, Switzerland, Fax +41 21 614 30 55,
E-mail / adresse courriel *:* info@archery.org
Return at the latest / A renvoyer au plus tard le: (20 days before the 1st day of the competition
(20 jours avant le premier jour de la compétition):
Entries received after that date will be refused. / Les inscriptions reçues après cette date seront refusées

NAME OF MEMBER ASSOCIATION / NOM DE L'ASSOCIATION MEMBRE

LIST OF ATHLETES / LISTE NOMINATIVE DE TOUS LES COMPETITEURS
(max. 3 in each category / 3 maximum dans chaque catégorie)
Please send an ID Picture of each person to be accredited. / Veuillez envoyer une photo d'identité de toutes les personnes à accréditer auprès de la FITA..

Recurve / "arc classique"

Junior Women /Juniors Dames
Last name /nom de famille First name / prénom
Birthdate/Date de naissance (born after 31/12/….)

1._____
DD/MM/YYYY: ___ ____ _____

2._____
DD/MM/YYYY: ___ ____ _____

3._____
DD/MM/YYYY: ___ ____ _____

Junior Men/ Juniors Hommes
Last name /nom de famille First name / prénom
Birthdate/Date de naissance(nés après le 31/12/….)

1. _____
DD/MM/YYYY: ___ ____ _____

2. _____
DD/MM/YYYY: ___ ____ _____

3. _____
DD/MM/YYYY: ___ ____ _____

Compound / "arc compound"

Junior Women / Juniors Dames
Last name /nom de famille First name / prénom
Birthdate/Date de naissance (born after 31/12/….)

1._____
DD/MM/YYYY: ___ ____ _____

2._____
DD/MM/YYYY: ___ ____ _____

3._____
DD/MM/YYYY: ___ ____ _____

Junior Men/ Juniors Hommes
Last name /nom de famille First name / prénom
Birthdate/Date de naissance(nés après le 31/12/….)

1. _____
DD/MM/YYYY: ___ ____ _____

2. _____
DD/MM/YYYY: ___ ____ _____

3. _____
DD/MM/YYYY: ___ ____ _____

Recurve / "arc classique"

Women / Dames
Last name / nom de famille First name / prénom
Birthdate/Date de naissance

1._____
DD/MM/YYYY: ___ ____ _____

2._____
DD/MM/YYYY: ___ ____ _____

3._____
DD/MM/YYYY: ___ ____ _____

Men/ Hommes
Last name / nom de famille First name / prénom
Birthdate/Date de naissance

1. _____
DD/MM/YYYY: ___ ____ _____

2. _____
DD/MM/YYYY: ___ ____ _____

3. _____
DD/MM/YYYY: ___ ____ _____

Compound / "arc compound"

Women / Dames
Last name /*nom de famille* First name / *prénom*
Birthdate/Date de naissance

1._____
DD/MM/YYYY: ___ ____ _____

2._____
DD/MM/YYYY: ___ ____ _____

3._____
DD/MM/YYYY: ___ ____ _____

Men / Hommes
Last name /nom de famille First name / prénom
Birthdate/Date de naissance

1. _____
DD/MM/YYYY: ___ ____ _____

2. _____
DD/MM/YYYY: ___ ____ _____

3. _____
DD/MM/YYYY: ___ ____ _____

Team Captain / capitaine d'équipe 1. _____

Assistants and coaches / assistants et entraîneurs 2. _____

3. _____

maximum 4 4. _____

(Art 3.15.1.2, in case of more than 4, only these 4 will be given competition field access /
s'il y a plus de 4 accompagnants: seules les 4 personnes mentionnées ci-dessus seront admises sur le terrain)

I hereby declare that our Member Association is in good standing and that all athletes and officials are covered in case of illness or accident and have signed the FITA Anti-Doping Agreement.
Je déclare que l'association membre est en situation financière saine et que l'ensemble des frais liés aux concurrents et aux officiels sont entièrement couverts ainsi qu' en cas de maladie ou d'accident. Tous ont signé l'accord FITA Antidopage.

Date: _____ Signature _____

President / *Président*
Secretary / *Secrétaire*

7. FIELD ARCHERY WORLD CHAMPIONSHIP - PRELIMINARY ENTRY FORM (SAMPLE)

The Organizers' own headed paper
(Name, Event, Date, Venue, Address, Emblem may all be used as desired)

PRELIMINARY ENTRY FORM / FORMULE PRELIMINAIRE DE PARTICIPATION

RETURN TO / RENVOYER A**: FITA**, Avenue de Cour 135, CH 1007 Lausanne, Switzerland,
Fax +41 21 614 30 55 E-mail /adresse couriel: info@archery.org

Return at the latest / Renvoyer au plus tard: (60 days before the 1st day of the competition)
(60 jours avant le premier jour de la compétition)
Preliminary Entries received after that deadline will be refused /
Les inscriptions reçues après cette date seront refusées

NAME OF MEMBER ASSOCIATION / NOM DE L'ASSOCIATION MEMBRE

NUMBER OF ATHLETES / NOMBRE DE COMPETITEURS (max 3 per category / par catégorie)

	JUNIOR WOMEN / JUNIORS DAMES:	JUNIOR MEN / JUNIORS HOMMES:
Recurve/Classique :	☐	☐
Compound	☐	☐
Barebow	☐	☐
Born in 19….. or younger (after 31/12/….)		Né(e)s en 19 …. Ou plus jeunes (après le 31/12/….

	WOMEN / DAMES:	MEN / HOMMES:
Recurve/Classique :	☐	☐
Compound	☐	☐
Barebow	☐	☐
Born in 19….. or younger (after 31/12/….)		Né(e)s en 19 …. Ou plus jeunes (après le 31/12/….

NUMBER OF OFFICIALS / NOMBRE D'OFFICIELS ET D'ACCOMPAGNANTS (maximum : 4)

Officiels ☐

(Art 3.15.1.2, in case of more than 4, only these 4 will be given competition field access / / s'il y a plus de 4 accompagnants: seules les 4 personnes mentionnées ci-dessus seront admises sur le terrain)

I hereby declare that our Member Association is in good standing and that all athletes and officials are covered in case of illness or accident and have signed the FITA Anti-Doping Agreement.
Je déclare que l'association membre est en situation financière saine et que l'ensemble des frais liés aux concurrents et aux officiels sont entièrement couverts ainsi qu' en cas de maladie ou d'accident. Tous ont signé l'accord FITA Antidopage.

Date: _____ Signature: _____

President / Président
Secretary / Secrétaire

8. FIELD ARCHERY WORLD CHAMPIONSHIP - ENTRY FORM (SAMPLE)

FINAL ENTRY FORM / FORMULAIRE DEFINITIF DE PARTICIPATION

Return to / A renvoyer à: **FITA**, Avenue de Cour 135, CH1007 Lausanne, Switzerland, Fax +41 21 614 30 55,
E-mail / adresse courriel : info@archery.org
Return at the latest / A renvoyer au plus tard le: (20 days before the 1st day of the competition
(20 jours avant le premier jour de la compétition):
Entries received after that date will be refused. / Les inscriptions reçues après cette date seront refusées

NAME OF MEMBER ASSOCIATION / NOM DE L'ASSOCIATION MEMBRE

LIST OF ATHLETES / LISTE NOMINATIVE DE TOUS LES COMPETITEURS
(max. 3 in each category / 3 maximum dans chaque catégorie)
Please send an ID Picture of each person to be accredited. / Veuillez envoyer une photo d'identité de toutes les personnes à accréditer auprès de la FITA..

Recurve / "arc classique"

Junior Women /Juniors Dames	**Junior Men/ Juniors Hommes**
Last name /nom de famille First name / prénom	Last name /nom de famille First name / prénom
Birthdate/Date de naissance (born after 31/12/….)	Birthdate/Date de naissance(nés après le 31/12/….)
1._____	1. _____
DD/MM/YYYY: ___ ____ _____	DD/MM/YYYY: ___ ____ _____
2._____	2. _____
DD/MM/YYYY: ___ ____ _____	DD/MM/YYYY: ___ ____ _____
3._____	3. _____
DD/MM/YYYY: ___ ____ _____	DD/MM/YYYY: ___ ____ _____

Compound / "arc compound"

Junior Women / Juniors Dames	**Junior Men/ Juniors Hommes**
Last name /nom de famille First name / prénom	Last name /nom de famille First name / prénom
Birthdate/Date de naissance (born after 31/12/….)	Birthdate/Date de naissance(nés après le 31/12/….)
1._____	1. _____
DD/MM/YYYY: ___ ____ _____	DD/MM/YYYY: ___ ____ _____
2._____	2. _____
DD/MM/YYYY: ___ ____ _____	DD/MM/YYYY: ___ ____ _____
3._____	3. _____
DD/MM/YYYY: ___ ____ _____	DD/MM/YYYY: ___ ____ _____

Barebow / "arc nu"

Junior Women / Juniors Dames	**Junior Men/ Juniors Hommes**
Last name /nom de famille First name / prénom	Last name /nom de famille First name / prénom
Birthdate/Date de naissance (born after 31/12/….)	Birthdate/Date de naissance(nés après le 31/12/….)
1._____	1. _____
DD/MM/YYYY: ___ ____ _____	DD/MM/YYYY: ___ ____ _____
2._____	2. _____
DD/MM/YYYY: ___ ____ _____	DD/MM/YYYY: ___ ____ _____
3._____	3. _____
DD/MM/YYYY: ___ ____ _____	DD/MM/YYYY: ___ ____ _____

Recurve / "arc classique"

Women / Dames
Last name / nom de famille First name / prénom
Birthdate/Date de naissance

1._____
DD/MM/YYYY: ___ ____ _____
2._____
DD/MM/YYYY: ___ ____ _____
3._____
DD/MM/YYYY: ___ ____ _____

Men/ Hommes
Last name / nom de famille First name / prénom
Birthdate/Date de naissance

1. _____
DD/MM/YYYY: ___ ____ _____
2. _____
DD/MM/YYYY: ___ ____ _____
3. _____
DD/MM/YYYY: ___ ____ _____

Compound / "arc compound"

Women / Dames
Last name /nom de famille First name / prénom
Birthdate/Date de naissance

1._____
DD/MM/YYYY: ___ ____ _____
2._____
DD/MM/YYYY: ___ ____ _____
3._____
DD/MM/YYYY: ___ ____ _____

Men / Hommes
Last name /nom de famille First name / prénom
Birthdate/Date de naissance

1. _____
DD/MM/YYYY: ___ ____ _____
2. _____
DD/MM/YYYY: ___ ____ _____
3. _____
DD/MM/YYYY: ___ ____ _____

Barebow / "arc nu"

Women / Dames
Last name /nom de famille First name / prénom
Birthdate/Date de naissance

1._____
DD/MM/YYYY: ___ ____ _____
2._____
DD/MM/YYYY: ___ ____ _____
3._____
DD/MM/YYYY: ___ ____ _____

Men / Hommes
Last name /nom de famille First name / prénom
Birthdate/Date de naissance

1. _____
DD/MM/YYYY: ___ ____ _____
2. _____
DD/MM/YYYY: ___ ____ _____
3. _____
DD/MM/YYYY: ___ ____ _____

Team Captain / capitaine d'équipe 1. _____

Assistants and coaches / assistants et entraîneurs 2. _____

3. _____

maximum 4 4. _____

(Art 3.15.1.2, in case of more than 4, only these 4 will be given competition field access /
s'il y a plus de 4 accompagnants: seules les 4 personnes mentionnées ci-dessus seront admises sur le terrain)

I hereby declare that our Member Association is in good standing and that all athletes and officials are covered in case of illness or accident and have signed the FITA Anti-Doping Agreement.
Je déclare que l'association membre est en situation financière saine et que l'ensemble des frais liés aux concurrents et aux officiels sont entièrement couverts ainsi qu' en cas de maladie ou d'accident. Tous ont signé l'accord FITA Antidopage.

Date: _____ Signature _____

President / Président
Secretary / Secrétaire

9. OUTDOOR TARGET ARCHERY WORLD CHAMPIONSHIP - HOTEL BOOKING FORM (SAMPLE)

The Organizers' own headed paper
(Name, Event, Date, Venue, Address, Emblem may all be used as desired)

HOTEL BOOKING FORM / RESERVATION HOTEL

Return to / A renvoyer à: (Name and address of **the Organizer**, Tel/Fax :, E-mail :)
Return at the latest / A renvoyer au plus tard le: 40 days before the 1st day of the competition / 40 jours avant le premier jour de la compétition

NAME OF MEMBER ASSOCIATION / NOM DE L'ASSOCIATION MEMBRE

All prices are full board (breakfast, lunch and dinner) and one softdrink at each meal included and are valid from 10 days before the championship till 2 days after./ Les prix s'entendent en pension complète et une boisson non alcoolisée à chaque repas et restent valable pour des séjours dix jours avant et 2 jours après le championnat.
All the rates are expressed in Euros per person and day / Tous les prix sont en Euro par personne et par jour.

4* hotels	Suite / appartement	***** Euro**
	Single/simple	** Euro**
	Double/double	** Euro**
	Triple/triple	** Euro**
3* hotels	Single/simple	** Euro**
	Double/double	** Euro**
	Triple/triple	** Euro**
2* hotels	Single/simple	** Euro**
	Double/double	** Euro**
	Triple/triple	** Euro**
	Quadruple/quadruple	** Euro**

BOOKING REQUEST
HOTEL CHOICE STARS ☐ 2* ☐ 3* ☐ 4*

DATE IN /arrivée……. DATE OUT/depart……..…… Nbr.Nights/nuits ……

☞**	Nbr. Suites/ nbr. appartements	☐
☞	Nbr.Single Rooms / chambres simples	☐
☞☞	Nbr.Double Rooms / chambres doubles	☐
☞☞☞	Nbr.Triple Rooms / chambres triples	☐
☞☞☞☞	Nbr.Quadruple Rooms / chambres quadruples	☐

Tot.nbr.persons/ nbr total de personnes: ……..

Booking will be done as requested, depending on Hotel class and location, in order of the requests as received. Booking confirmation will be then sent back to the applicants, with request to pay a booking charge corresponding to the 50% of the total amount involved, to be paid before (date)……... Les réservations seront enregistrées en fonction des disponibilités à la date de la demande. Une confirmation de réservation sera envoyée et une avance correspondant à 50% du montant totale de la réservation devra être faite au plus tard pour le (date)……...

Payments must be sent to/Le paiement doit être effectué à : (bank account / compte bancaire)

Date: …… Signature: ……

10. OUTDOOR TARGET ARCHERY WORLD CHAMPIONSHIP - TRANSPORT FORM (SAMPLE)

The Organizers' own headed paper
(Name, Event, Date, Venue, Address, Emblem may all be used as desired)

TRANSPORT FORM / FORMULAIRE DE TRANSPORT (voyage)

Return to / A renvoyer à: : (Name and address of the **Organizer**, Tel/Fax :, E-mail :)
Return at the latest (date) …….. / A renvoyer au plus tard (date)

NAME OF MEMBER ASSOCIATION / NOM DE L'ASSOCIATION MEMBRE

Total number of Archers / Nombre total d'archers: ……
Total number of Officials / Nombre total d'officiels: ……

Means of Transportation (Please tick appropriate box) / Moyen de transport (veuillez l' indiquer)

ARRIVAL / ARRIVEE

✈ ☐ Airport / Aéroport: Place……☐…Other / autres……
Flight #N° VOL: ……. From / de:……
Date: …../…. Time/heure:…. h…..mn

🚇 ☐ Train number / N° de train : ……..
Arriving from / Arrivant de: …… ……
Date: …../…. Time / heure:…. h…..mn

🚗/🚌 ☐ Date: …../…. Time / heure:…. h…..mn

DEPARTURE / DEPART

✈ ☐ Airport / Aéroport: Place……☐ Other / autres: ……
Flight # N° VOL: …….
Date: …../…. Time / heure:…. h…..mn

🚇 ☐ Train number / N° de train : ……..
Departure to / Destination: …… …….
Date: …../…. Time / heure:…. h…..mn

🚗/🚌 ☐ Date: …../…. Time / heure:…. h…..mn

Date: _____ Signature _____

President / Président
Secretary / Secrétaire

APPENDIX 9

ATHLETES WITH DISABILITIES

FITA welcomes the participation of athletes with disabilities at FITA events. In order to obtain FITA Performance Awards, claim FITA World Records or participate in FITA Championships, athletes must follow the FITA rules laid down in the C & R book, with specific reference to Chapter 2.1.1.

FITA is working with the International Paralympic Committee (IPC) Archery to enable athletes with disabilities to compete at FITA events with the prior approval of the event organizer. IPC is responsible for the classification standards, which are not part of the FITA rules.

Athletes with disabilities who carry IPC Classification, and who may require special consideration in order to compete, should apply directly to the event organizer prior to the event in questions stating their specific requirements.

FITA Constitution and Rules with specific clauses for athletes with disabilities

Articles for Outdoor Target Archery
7.1.1.8
7.3
7.4.4
7.5.2.3
7.6.1.8
7.7.4.2

Articles for Indoor Target Archery
8.3
8.4.4
8.5.2.3
8.6.1.6
8.7.4.2

APPENDIX 10

FITA FANFARE

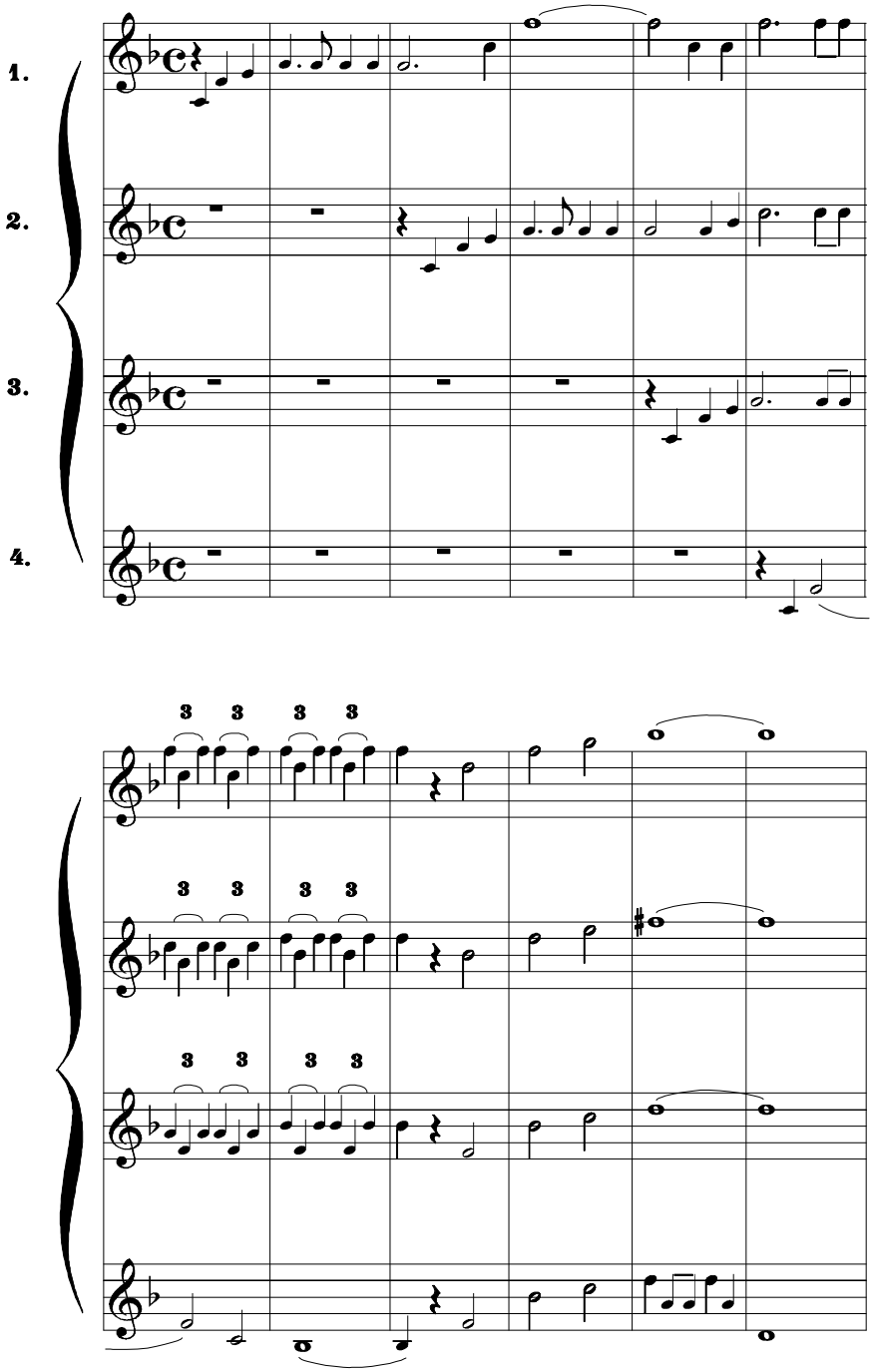

Composed by Mr. Jiri L. Bastar for the World Championships held in Prague in 1957

APPENDIX 11

FITA MATCH PLAY CHARTS

1. MATCHPLAY CHART (64 athletes, <u>byes are permitted</u>)

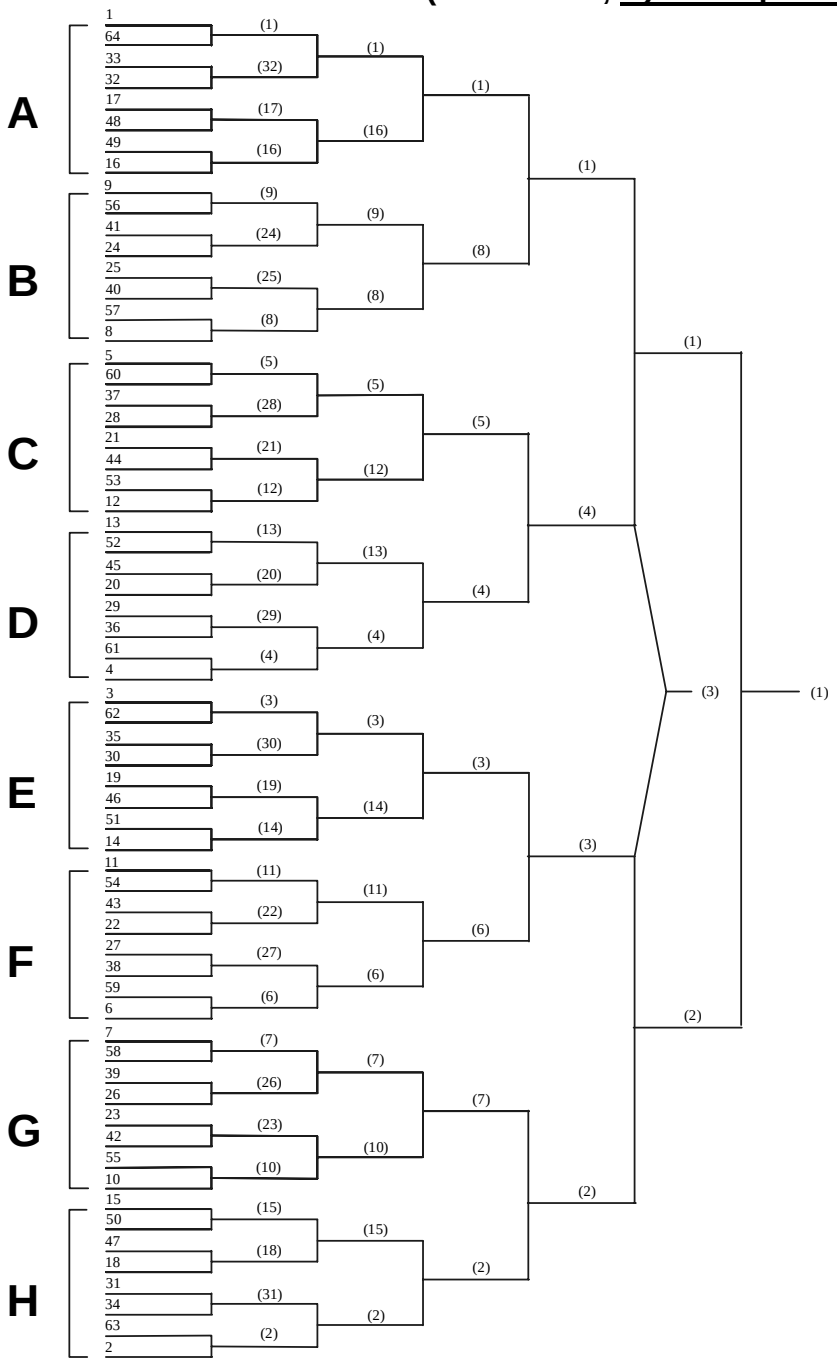

1/32 1/16 1/8 1/4 Semi Bronze Gold

Eliminations Finals

Order of shooting:	all	all	all	CD/EF GH/AB	EFGH ABCD	

2. MATCH PLAY CHART (32 athletes, <u>byes are permitted</u>)

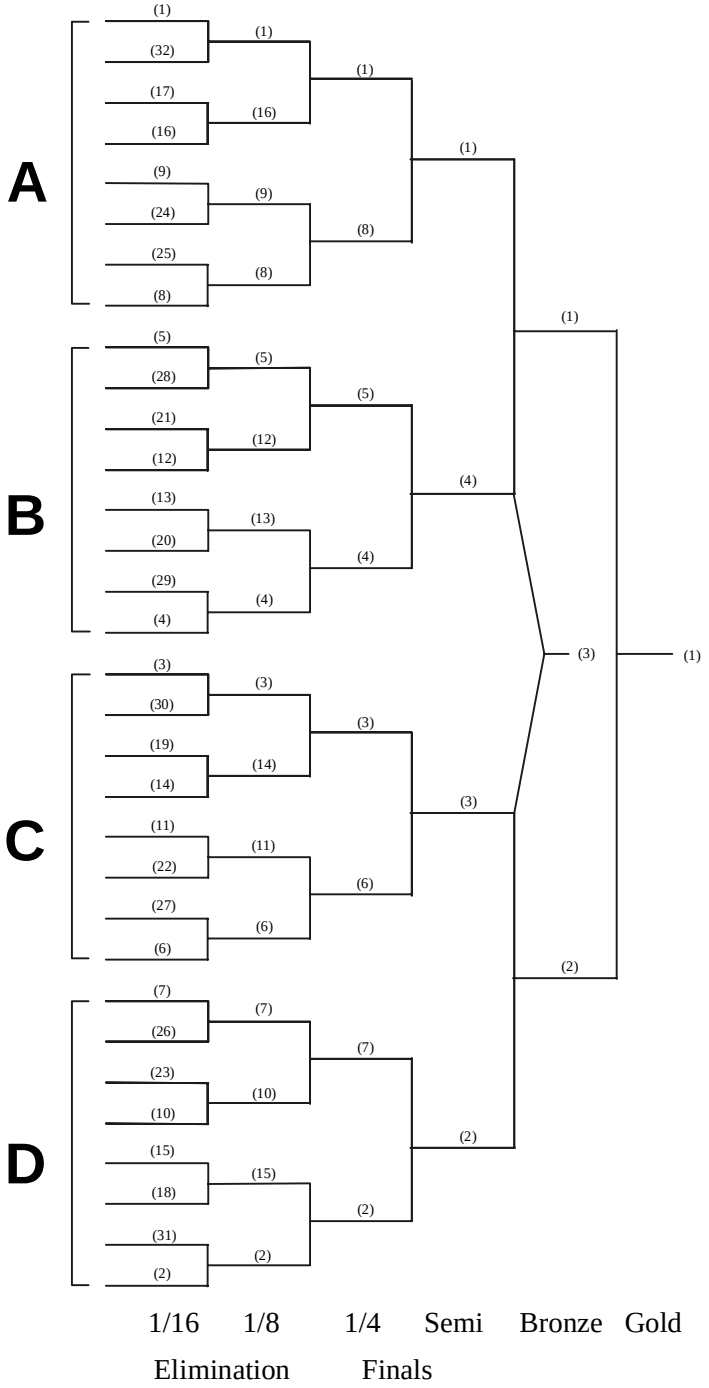

3. MATCH PLAY CHART (16 athletes or 16 teams, <u>byes are permitted</u>)

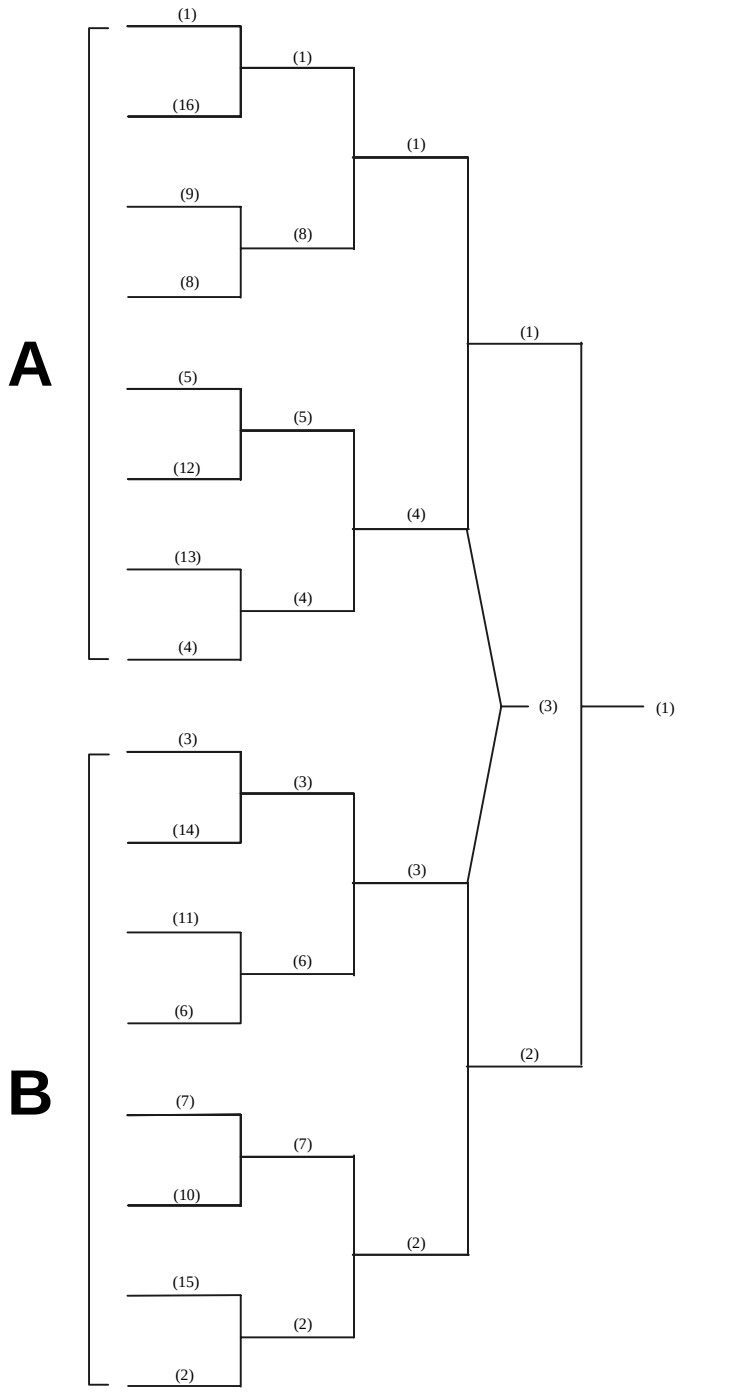

1/8 Elimination	1/4	Semi Finals	Bronze	Gold
Order of shooting:		B/A		

APPENDIX 12

FITA WORLD RANKING EVENTS

Thanks to the efforts of the ad hoc World Ranking Committee the World Ranking List has developed into a valuable tool that meets the expectations of the media and thus helps promote Archery on an international, national and personal level.
In order for the World Ranking List to be functional, accurate and cost effective it is essential that the Organizers of World Ranking Events submit correct and complete information in a timely manner using a standardized FITA approved format. The FITA Office will provide an organizer's package setting forth the required format. FITA wishes to thank Organizers of World Ranking Events for their assistance in this regard.

WORLD RANKING STATUS TOURNAMENT APPLICATION FORM
FORMULAIRE DE DEMANDE DE TOURNOI AVEC STATUS CLASSEMENT MONDIAL

Country / Pays

Name of Tournament / Nom du Tournoi

Venue / Lieu

Date of tournament / Date du Tournoi

Divisions (Please select with a X / Sélectionner avec un X)		
Recurve	**Yes-oui:**	**No-Non:**
Compound	**Yes-oui:**	**No-Non:**

Chairman Organizing Committee / Président Comité d'organisation	
Name:	
Phone:	**Fax**:
E-mail:	

Results Manager / Responsable des résultats	
Name:	
Phone:	**Fax**:
E-mail:	

International or Continental Judges / Juges Internationaux ou Continentaux	
Name :	
Mention if IJ or CJ / Mentionner si JI or JC:	
Phone:	**Fax**:
E-mail:	
Name:	
Mention if IJ or CJ / Mentionner si JI or JC:	
Phone:	**Fax**:
E-mail:	

Technical Delegate / Délégué Technique	
Name:	
Phone:	**Fax**:
E-mail:	
Address:	
Prior Experience:	

We agree to comply with the Minimum Standard Criteria (MSC) and will supply the results to the FITA office in the agreed deadlines and correct format.

Nous nous engageons à nous conformer aux CSM et à fournir les résultats au bureau de la FITA aux délais convenus et dans un format correct.

President Member Association / Président Association Membre

Signed: Date:

To be filled in by the Continental Association President / A remplir par le Président de l'Association Continentale

□ We accept this tournament as World Ranking Event

□ We do not accept this tournament as a World Ranking Event

Reason for NON-ACCEPTANCE …….

……..

President Continental Association / Président Association Continentale

Name (print):

Signed: Date:

FITA WORLD RANKING

The FITA World Ranking Ad Hoc Committee is continually reviewing both the validity of the World Ranking List as well as the standard of the Tournaments which will carry the status of a World Ranking Event (WRE) Sanction.

The following were approved by FITA Council:

1. **Minimum Standard Criteria** (MSC)
   1. Free access for all athletes and their sports equipment into the country
   2. FITA C&R (2004) 3.4, 3.4.1-3.4.3, 3.4.5.
   3. Minimum of 2 (two) FITA International or Continental Judges appointed
   4. Technical Delegate inspection and review
   5. Event endorsed and guaranteed by the respective Continental Association (CA)
   6. The Organiser has to provide for each archer, the following information in order to ensure no duplicate information on archers in the database:
      - ID Number
      - Name (Family name, First Name)
      - Category
      - Date of Birth (DD/MMM/YYYY)
      - Member Association Acronym
   7. Results in FITA required format agreed and supervised by a nominated official at the event. The results must be sent to the FITA Office no later than 1 (one) week after the tournament in hard copy and electronic copy as specified in the organizer's pack

2. **Submission of World Ranking Events for Sanction by FITA**
   1. MA's will apply for WR Status events via their respective Continental Association on the appropriate form. No other form of application will be accepted. Up to 6 events per Continental Association can be programmed in a year.
   2. The Continental Association will then submit the event to the FITA Office. If the Continental Association rejects the event, the "Non-ACCEPTANCE" box is checked and the President signs the form and adds a reason for non acceptance.
   3. The FITA Office will forward all applications to the World Ranking Ad Hoc Committee Chairman who will consider all applications and submit their final suggestions for approval by FITA Executive Committee.
   4. All FITA WRE as sanctioned will be inserted in the FITA Calendar by the FITA Office.

3. **Automatic World Ranking Status** will only apply to The Olympic Games, World Championships, and Continental Championships (the latter, provided that the MSC has been applied). Please note that CQT's are not considered as World Ranking events.

Notes

1. For World Championships and Continental Championship, appointment of Officials as per FITA Rules
2. For other events:

   It is recommended ***but not mandatory***, that the Chairman of the Tournament Judge Commission is not from the host MA. The remainder of the Tournament Judge Commission can be National, Continental or International Judges from the applying MA. Appointments from outside the MA will be arranged by the CA in liaison with the FITA Judge Committee.

   It is recommended ***but not mandatory*** that a Technical Delegate (TD) be appointed, the CA bears the costs for the preliminary and subsequent visits by the TD or the Organiser appoints and bears the expense if the CA declines.
3. In either case, no costs can be set against FITA or the WR Ad Hoc Committee.
4. It is recommended that the program used for the results system will be the official FITA Results program as soon as it will be available. If another program is used it will have to comply with FITA and Olympic Results and Information Services (O.R.I.S.) standard.

APPENDIX 13

FITA ANTI-DOPING AGREEMENT

I, as a member of a Member Association of FITA or participating in a FITA authorized or recognized event, hereby acknowledge and agree as follows:

1. I have received information on the FITA Anti-Doping Rules and had an opportunity to review them.
2. I consent and agree to comply with and be bound by all of the provisions of the FITA Anti-Doping Rules, including but not limited to, all amendments to the Anti-Doping Rules* and all International Standards* incorporated in the Anti-Doping Rules.
3. I acknowledge and agree that FITA and its Member Associations have jurisdiction to impose sanctions as provided in the FITA Anti-Doping Rules.
4. I also acknowledge and agree that any dispute arising out of a decision made pursuant to the FITA Anti-Doping Rules, after exhaustion of the process expressly provided for in the FITA Anti-Doping Rules, may be appealed exclusively as provided in Article 13 of the FITA Anti-Doping Rules to an appellate body for final and binding arbitration, which in the case of International-Level Athletes is the Court of Arbitration for Sport.
5. I acknowledge and agree that the decisions of the arbitral appellate body referenced above shall be final and enforceable, and that I will not bring any claim, arbitration, lawsuit or litigation in any other court or tribunal.
6. I have read and understood this Acknowledgement and Agreement.

_____	_____
Date	Print Name (Last Name, First Name)
_____	_____
Date of Birth (Day/Month/Year)	Signature (or, if a minor, signature of legal guardian)

* For the FITA Anti-Doping Rules and the International Standards in effect see: www.archery.org and/or www.wada-ama.org

MEMBER ASSOCIATIONS

FITA is proud to count the following countries among its members

Member Associations

Acronym	Country
ARG	Argentina/Argentine
ARM	Armenia/Arménie
ASA	American Samoa/ Samoa Américaines
AUS	Australia/Australie
AUT	Austria/Autriche
AZE	Azerbaijan/Azerbaïdjan
BAN	Bangladesh
BAR	Barbados/Barbade
BEL	Belgium/Belgique
BER	Bermuda/Bermudes
BHU	Bhutan/Bhoutan
BLR	Belarus/Bélarus
BOT	Botswana
BRA	Brazil/Brésil
BUL	Bulgaria/Bulgarie
CAF	Central African Republic/ République Centrafricaine
CAM	Cambodia/Cambodge
CAN	Canada/Canada
CHI	Chile/Chili
CHN	People's Republic of China/ République Populaire de Chine
CIV	Ivory Coast/Côte d'Ivoire
CMR	Cameroun
COL	Colombia/Colombie
CRC	Costa Rica/Costa Rica
CRO	Croatia/Croatie
CUB	Cuba/Cuba
CYP	Cyprus/Chypre
CZE	Czech Republic/ République Tchèque
DEN	Denmark/Danemark
DOM	Dominican Republic/ République Dominicaine
ECU	Ecuador/Equateur
EGY	Egypt/Egypte
ESA	El Salvador/El Salvador
ESP	Spain/Espagne
EST	Estonia/Estonie
FER	Faroe Islands/Iles Féroé
FIJ	Fiji/Fidji
FIN	Finland/Finlande
FPO	Tahiti/Tahiti
FRA	France/France
GBR	Great Britain/Grande Bretagne
GEO	Georgia/Géorgie
GER	Germany/Allemagne
GHA	Ghana
GRE	Greece/Grèce
GUA	Guatemala/Guatemala
GUM	Guam/Guam
HKG	Hong Kong,China/ Hong Kong,Chine
HON	Honduras
HUN	Hungary/Hongrie
INA	Indonesia/Indonésie
IND	India/Inde
IRI	Islamic Republic of Iran/ République Islamique d'Iran
IRL	Ireland/Irlande
IRQ	Iraq/Iraq
ISL	Islande/Iceland
ISR	Israel/Israël
ITA	Italy/Italie
JPN	Japan/Japon
KAZ	Kazakhstan/Kazakhstan
KEN	Kenya/Kenya
KGZ	Kyrgyzstan/Kirghizistan
KOR	Korea/Corée
KSA	Saudi Arabia/Arabie Saoudite
KUW	Kuwait/Koweit
LAO	Laos P.D.R.
LAT	Latvia/Lettonie
LBA	Libyan Arab Jamahiriya/ Jamahiriya Arabe Libyenne
LIB	Lebanon/Liban
LIE	Liechtenstein/Liechtenstein

LTU	Lithuania/Lituanie
LUX	Luxembourg/Luxembourg
MAC	Macao, China/Macao, Chine
MAR	Morocco/Maroc
MAS	Malaysia/Malaisie
MDA	Republic of Moldova/ République de Moldavie
MEX	Mexico/Mexique
MGL	Mongolia/Mongolie
MKD	Former Yugoslav Rep. of Macedonia/ Ex-Rép. Yougoslave de Macédoine
MLT	Malta/Malte
MON	Monaco/Monaco
MRI	Maurice/Mauritius
MYA	Myanmar/Myanmar
NAM	Namibia
NED	Netherlands/Pays-Bas
NEP	Nepal/Népal
NFI	Norfolk Islands/Iles Norfolk
NGR	Nigeria/Nigéria
NMI	Northen Mariana Islands/ Iles Mariana du Nord
NOR	Norway/Norvège
NZL	New Zealand/Nouvelle-Zélande
PAN	Panama/Panama
PAR	Paraguay/Paraguay
PER	Peru/Pérou
PHI	Philippines/Philippines
POL	Poland/Pologne
POR	Portugal/Portugal
PRK	Korea DPR/Corée RDP
PUR	Puerto Rico/Porto Rico
QAT	Qatar/Qatar
ROM	Romania/Roumanie
RSA	South Africa/Afrique du Sud
RUS	Russian Federation/ Fédération de Russie
SEN	Senegal/Sénégal
SIN	Singapore/Singapour
SLO	Slovenia/Slovénie
SMR	San Marino/Saint-Marin
SRI	Sri Lanka/Sri Lanka
SUI	Switzerland/Suisse
SUR	Suriname/Suriname
SVK	Slovakia/Slovaquie
SWE	Sweden/Suède
SYR	Syrian Arab Republic/ République Arabe Syrienne
TGA	Tonga/Tonga
THA	Thailand/Thailande
TJK	Tajikistan/Tadjikistan
TKM	Turkmenistan/Turkménistan
TPE	Chinese Taipei/Chinese Taipei
TRI	Trinidad and Tobago/ Trinité-et-Tobago
TUR	Turkey/Turquie
UGA	Uganda/Ouganda
UKR	Ukraine/Ukraine
URU	Uruguay/Uruguay
USA	United States of America/ Etats Unis d'Amérique
UZB	Uzbekistan/Ouzbékistan
VAN	Vanuatu
VEN	Venezuela/Venezuela
VIE	Viet Nam/Viet Nam
YUG	Yugoslavia/Yougoslavie
ZAM	Zambia/Zambie
ZIM	Zimbabwe/Zimbabwe

New Member Associations

BAN
GHA
KGZ
SEN

Acronym	Country

ASSOCIATE MEMBERS

FITA wishes to thank its Associate Members for their support to the development of Archery

ARIZONA ARCHERY ENTERPRISES
ARROWHEAD U.K
ARTEMIS DECATHLON
ASAHI ARCHERY CO. LTD.
BAGAR & PILAR
BJORN BENGTSON SWEDEN AB
BROWNING
CARBOTECH
EASTON TECHNICAL PRODUCTS
HOYT USA
ISHII ARCHERY CO. LTD.
JAN VAN DRUNEN BOGENCENTRUM BV
KINSEY'S ARCHERY PRODUCTS INC.
MAPLE LEAF PRESS INC.

OLYMPE INTERNATIONALE

ROSA INC.

WERNER BEITER TECHN.KUNSTS.

WIN & WIN ARCHERY CO.

The following Associate Members are
Official FITA Target Faces Makers:

Bjorn BENGSTON (SWE)
Maple Leaf Press (MI – USA)
J.V.D. Distribution (NED)
Olympe (FRA)
Artemis Decathlon (FRA)
Arrowhead (UK)

ADDENDUM

Following the decisions of Congress in New York the C&R Book has been updated. We have tried to improve the wording of many articles. Rule changes are highlighted by underlining the relevant passages.

1. For practical reasons the C&R Book has been divided into 5 Books.
   There will be 2 editions: one edition in one volume and an edition in which each book is printed separately.
   Since Archery Biathlon belongs to FITA again we include the rules as SKI-ARC.
   Book 1 - Constitution - Administration (Chapters 1-6) (new appendix5 and 12)
   Book 2 - Outdoor Target Archery (Chapter 7)
   Book 3 - Indoor Target Archery (Chapter 8)
   Book 4 - Field Archery (Chapter 9)
   Book 5 – Ski-Archery (Chapter 10) - Miscellaneous Rounds (Chapter 11)

2 . Articles changed:

BOOK 1

Chapter 1
1.3.2.2
1.3.2.3
1.4.1
1.6.12
1.6.13
1.9.3
1.9.4
1.12.6
1.12.7
1.13.5-8
1.14.1
1.14.4
1.15
1.15.7
1.16.2.1
1.17.2
1.19 (new – renumber rest)
1.30.1

Chapter 2
2.1.5
2.2.2
2.2.5 new - renumber
2.3.1
2.4.1 + renumber

Chapter 3

3.1.1
3.5.11
3.7.2
3.7.4
3.7.4.1-3
3.13.2
3.16.1.2
3.19.1.1/2
3.20.6

Chapter 4

4.1.1
4.3.6
4.3.7
4.4
4.5.1.2
4.5.1.4
4.5.1.5 (new)
4.5.1.6 (new) renumber
4.5.3.6.1 renumber 2-6
4.5.3.10.1
4.5.3.12
4.5.4
4.5.7
4.7.2
4.7.5
4.7.8
4.7.9

Chapter 5

5.1.1-7
5.3.1.1/2
5.4.4

Chapter 6
6.3.2.3
6.3.4.2 (new)
6.5.1.1

Book1 App. 1
4.1.1
5.2
5.2.5 renumber
5.2.15
6.6.1

Book1 App. 2
1.3

Book1 App. 5
Anti-Doping Rules new!!!

Book1 App. 7
OC Rule 45
Bylaw 3
OC Rule 61
Bylaw
Archery Exemption

Book1 App. 8
Anti-Doping agreement

Book1 App. 11
byes

Book1 App. 12
new

Book1 App. 13
new

BOOK 2

Chapter 7

7.1.1.1
7.2.4.2
(old 7.5.4.7.2)
7.3.1.5.3
7.4.2.3 deleted,
rest renumbered
7.4.2.8
7.4.2.9 part del.
7.5.4.7.2 deleted,
rest renumbered
7.6.1.2
7.6.1.3
7.6.1.4-7
7.6.5.1/2 (hits
deleted)
7.6.7
7.8
7.8.1.5
7.8.2.3
7.8.2.5
7.8.3.2
7.9.1.1
7.10.1.1
Appendix 1
Appendix 3 (hits)

BOOK 3

Chapter 8

8.1.1.4
8.2.4.2
(old 8.5.3.6.2)
8.3.1.5.3
8.4.2.3 del.
renumber
8.4.2.8
8.4.2.9
8.5.3.6.2 deleted
rest renumbered
8.6.1.3-5
8.6.5.1/2
(hits deleted)
8.6.7
8.8
8.8.1.5
8.8.2.3
8.8.2.5
8.8.3.2
8.9.1.1
8.10.1.1
Appendix 1
Appendix 3 (hits)

BOOK 4

Chapter 9

9.2.1.3
9.3.5.1.3
9.5.1.14
9.6.3.1/2
(hits deleted)
9.8
9.8.1.5
9.8.2.3
9.10.1.1

BOOK 5

Chapter 10

new

Chapter 11

11.6.2
11.6.4
11.6.7.5
11.6.7.6
renumber
11.9 new
11.10 new

FITA HEADQUARTERS
Avenue de Cour 135
1007 LAUSANNE
SWITZERLAND
e-mail: info@archery.org
homepage: http://www.archery.org

Published in 2004 by:

Fédération Internationale de Tir à l'Arc

Edited by:

FITA's Constitution and Rules Committee
Mr. Klaus-Dietrich Schulz, Chairman
Mr. Tom Dielen, Member
Mr. Mark Miller, Member
Mr. Giuseppe Cinnirella, Secretary General
with the assistance of Mr.Terry Reilly, Executive Director